A144 Lift Recliner Power (LP)_12.05.25

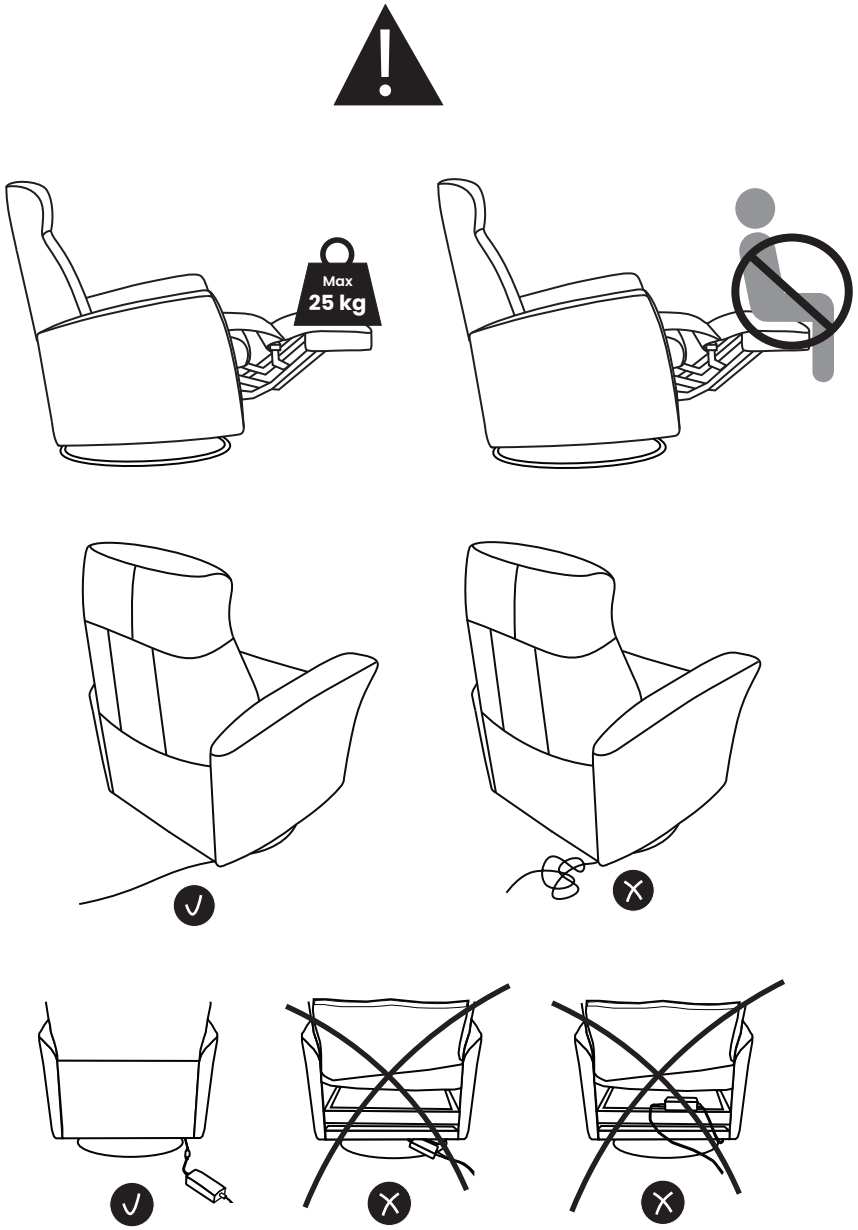

Please visit h2seating.com
or scan QR code for more information

Lift Recliner

Power (LP)

1

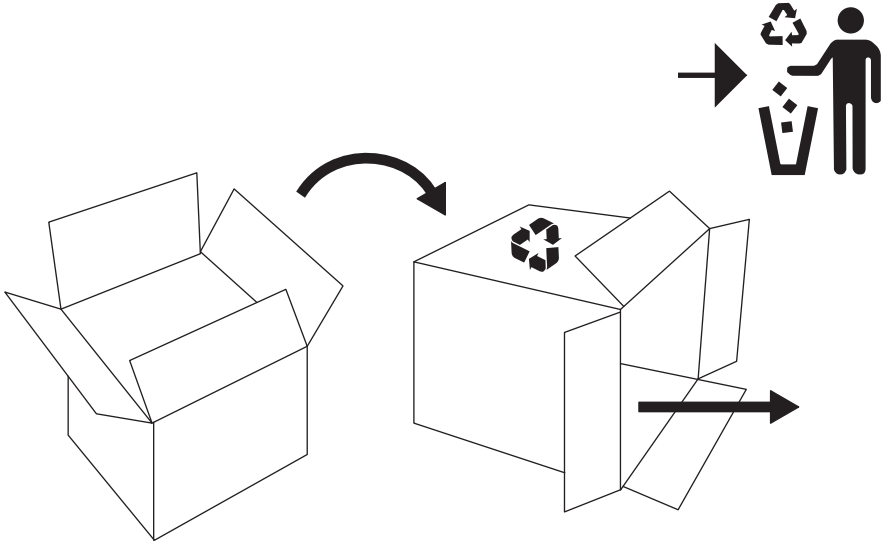

2

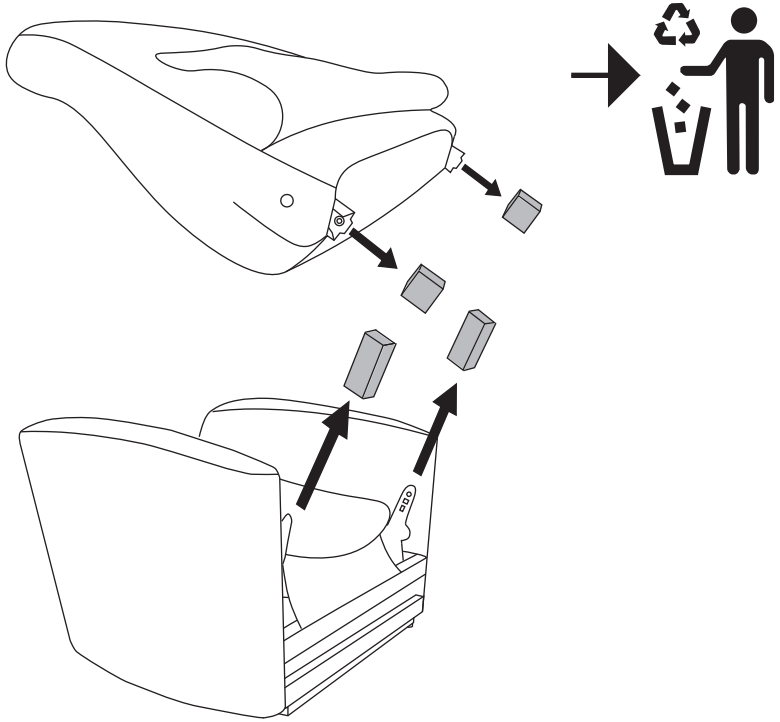

3

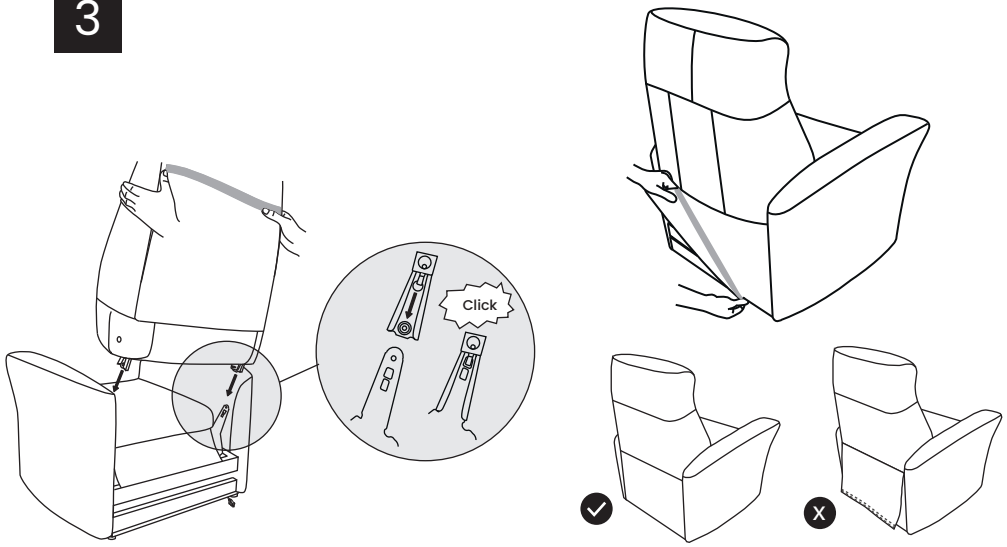

4

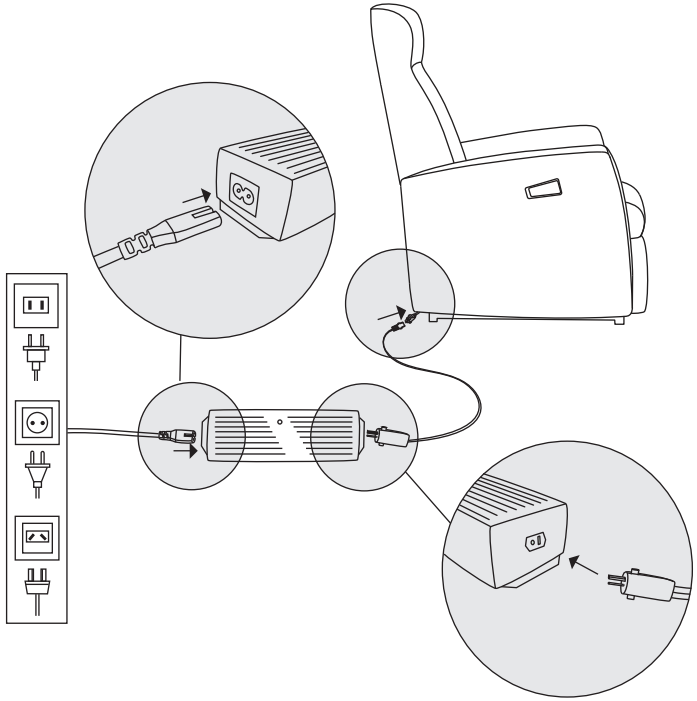

A146 Lift Recliner PowerPLUS (LS)_12.05.25

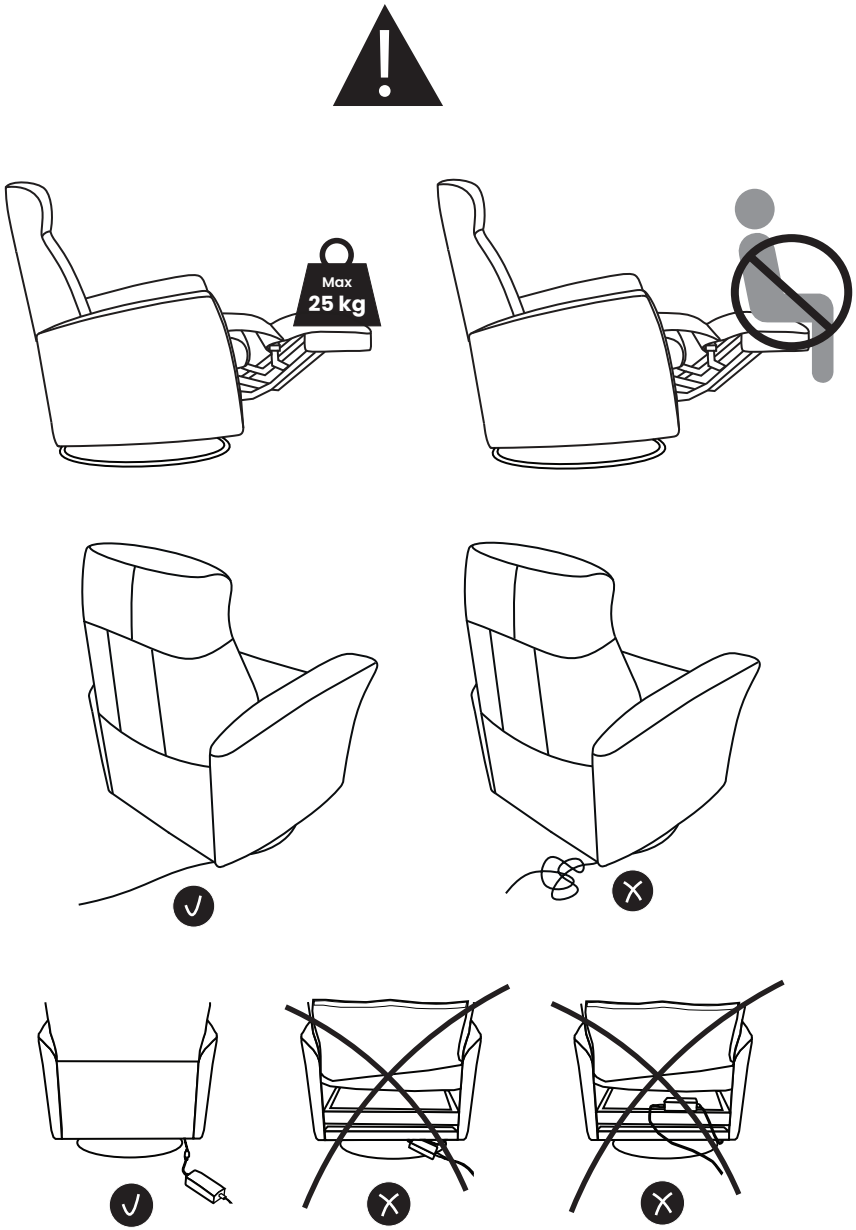

Please visit h2seating.com
or scan QR code for more information

Lift Recliner

PowerPLUS (LS)

1

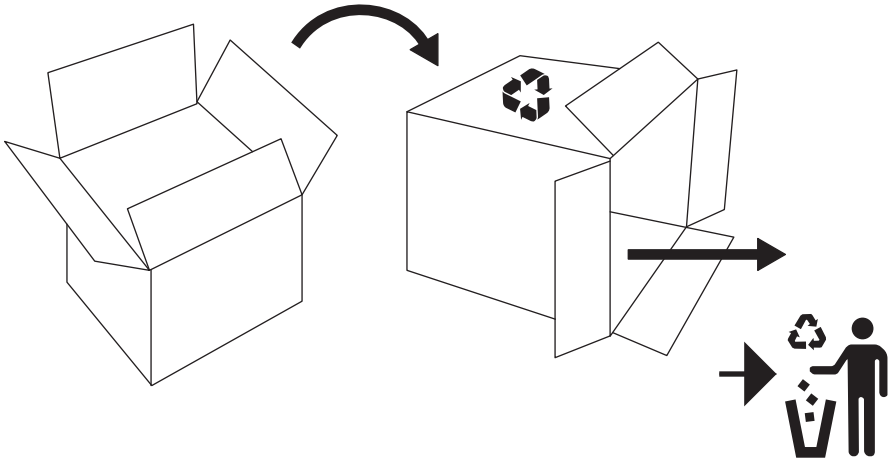

2

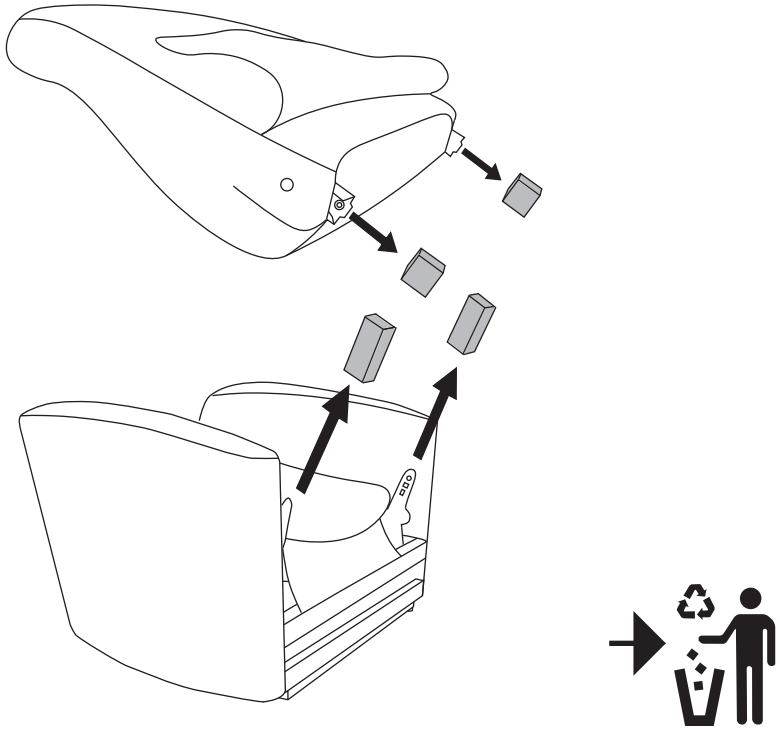

3

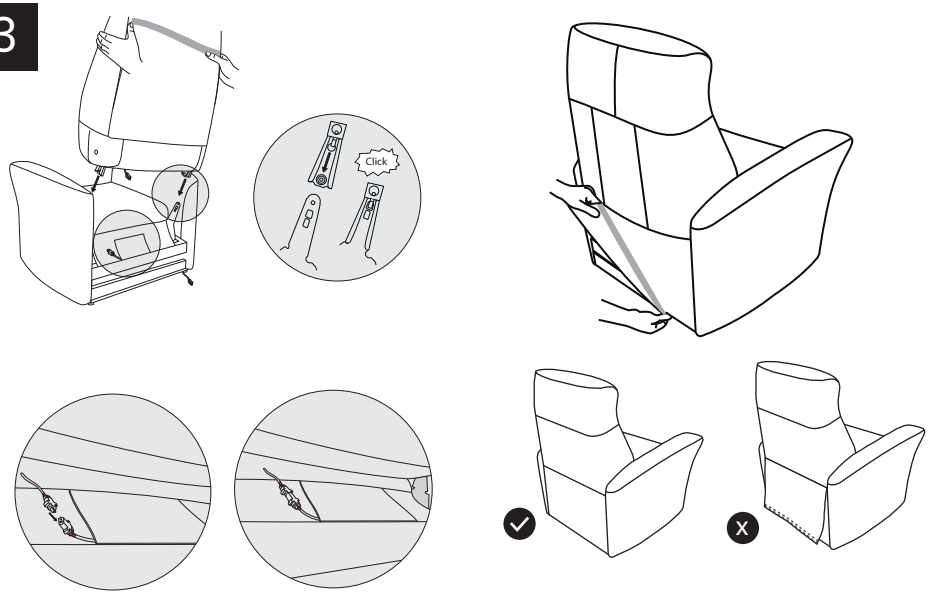

4

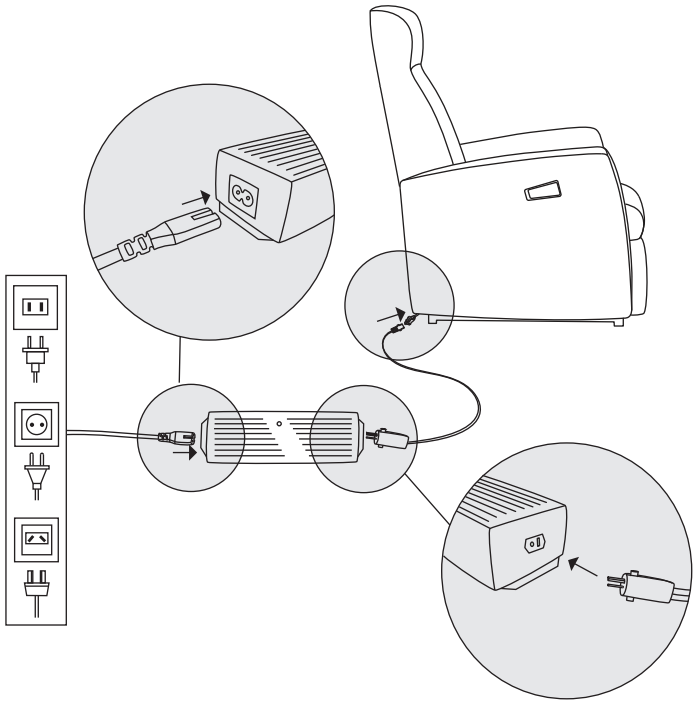

A348 Lift Recliner PowerLUX (LL)_12.05.25

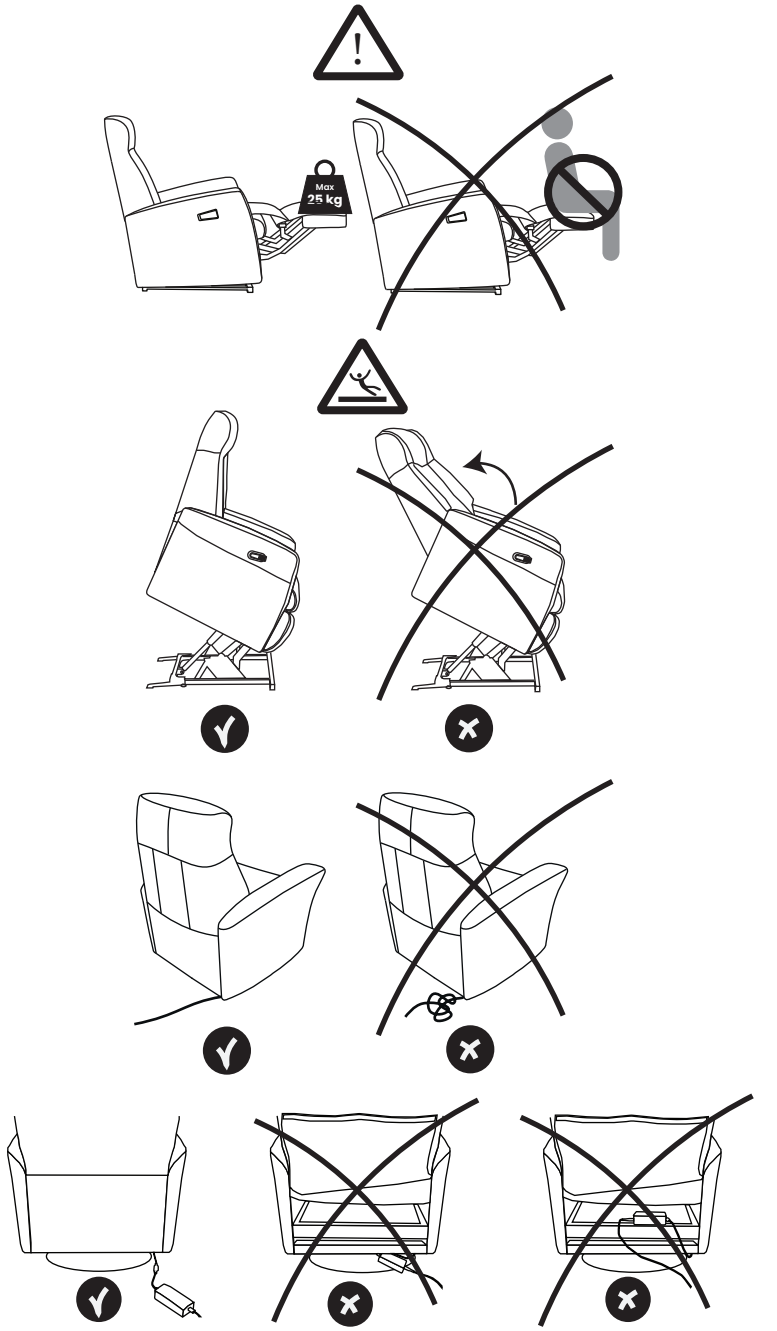

Please visit h2seating.com
or scan QR code for more information

Lift Recliner

PowerLUX (LL)

1

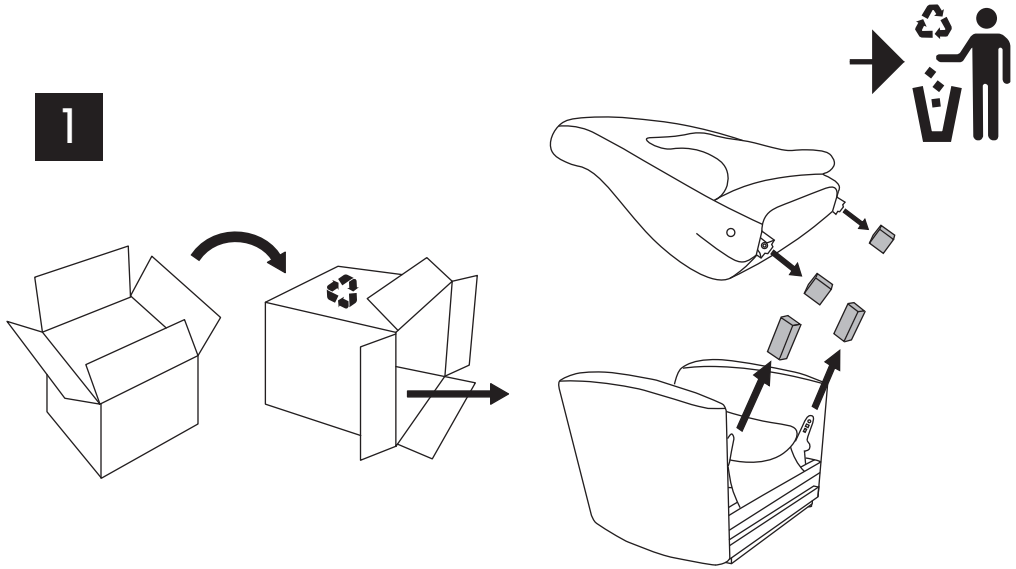

2

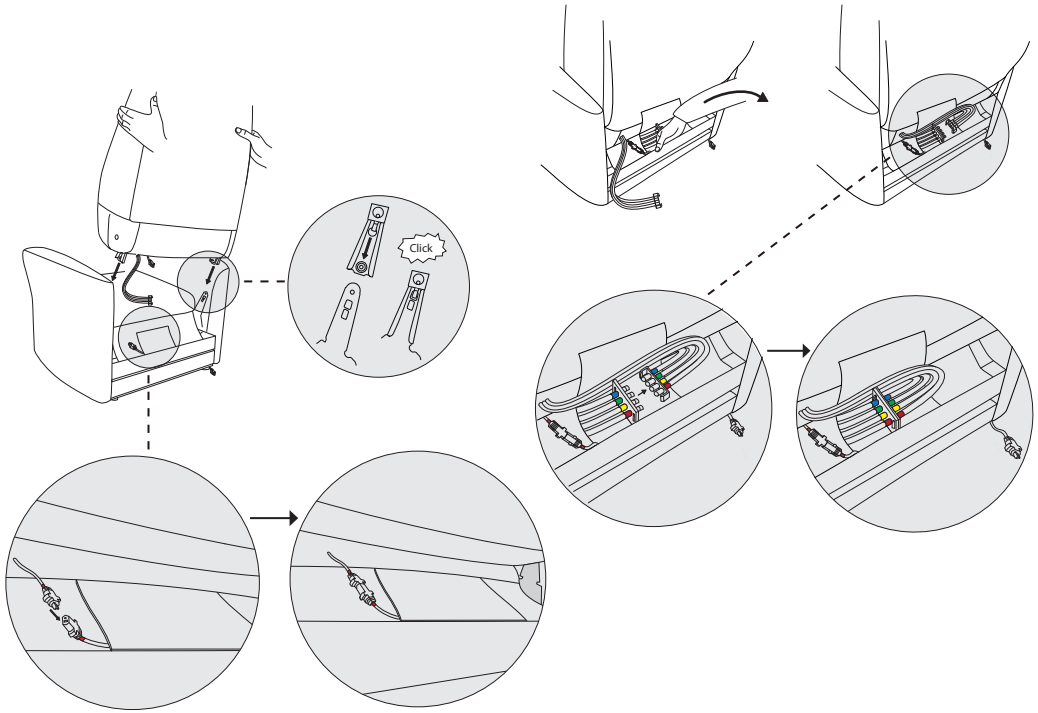

3

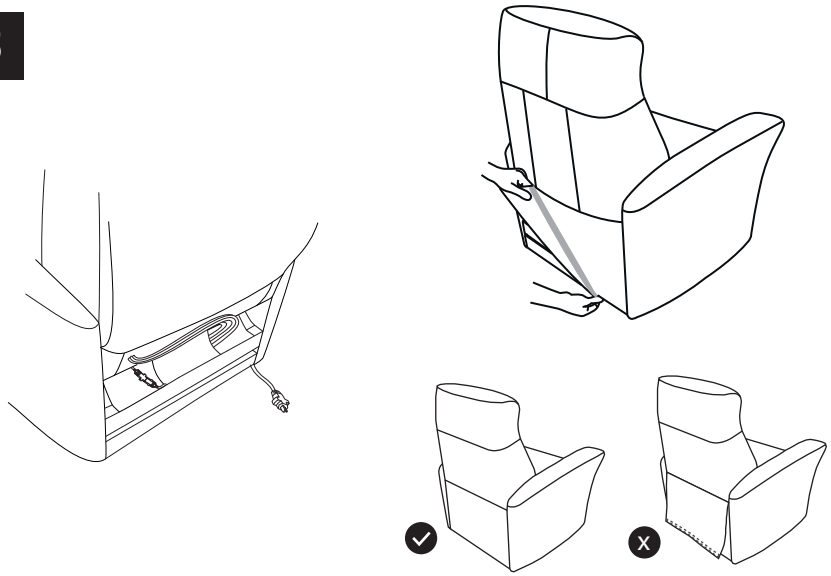

4

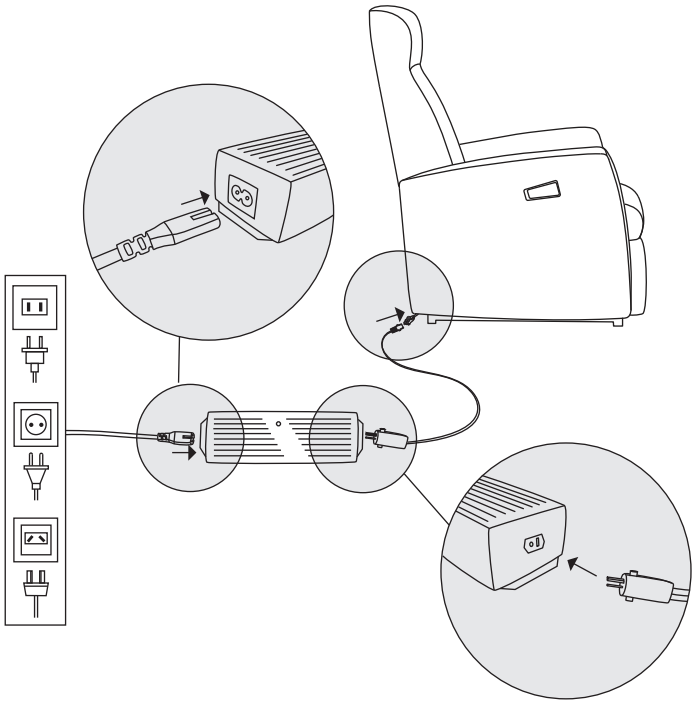

A145 Multi-Functional Lift Recliner Power (MP)_12.05.25

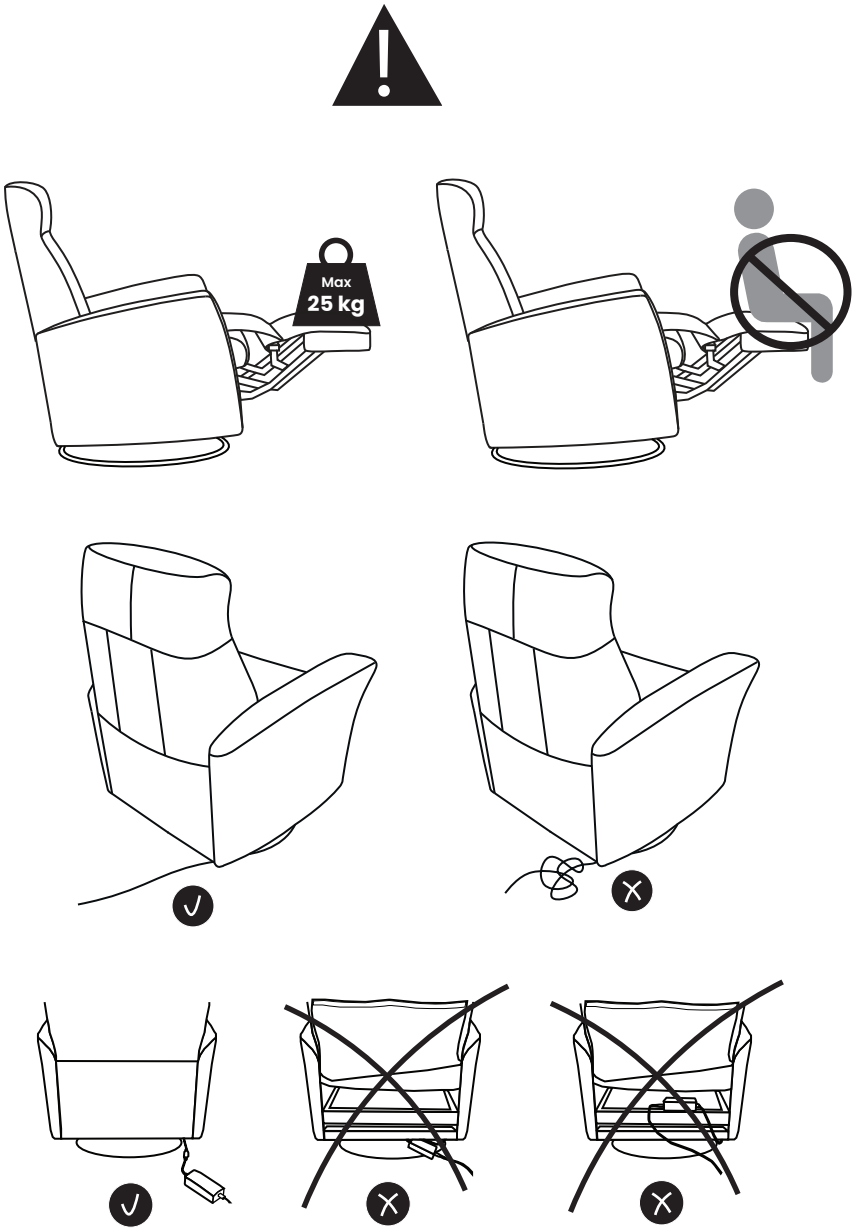

Please visit h2seating.com
or scan QR code for more information

Multi-Functional Lift Recliner

Power (MP)

1

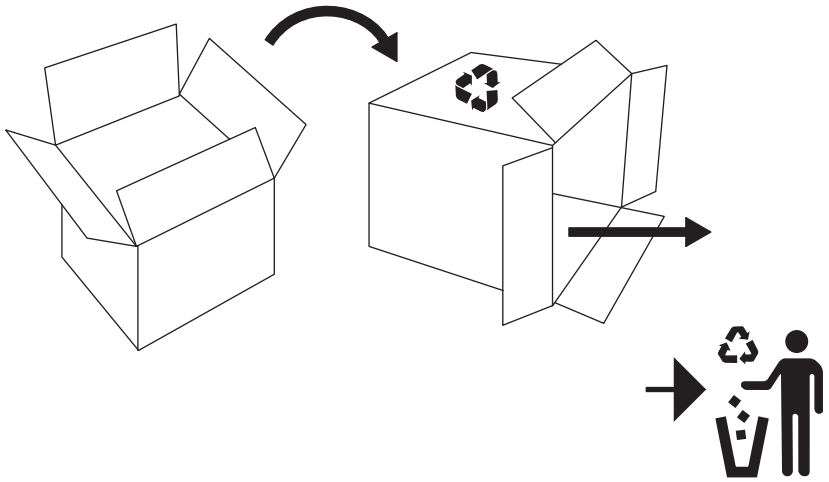

2

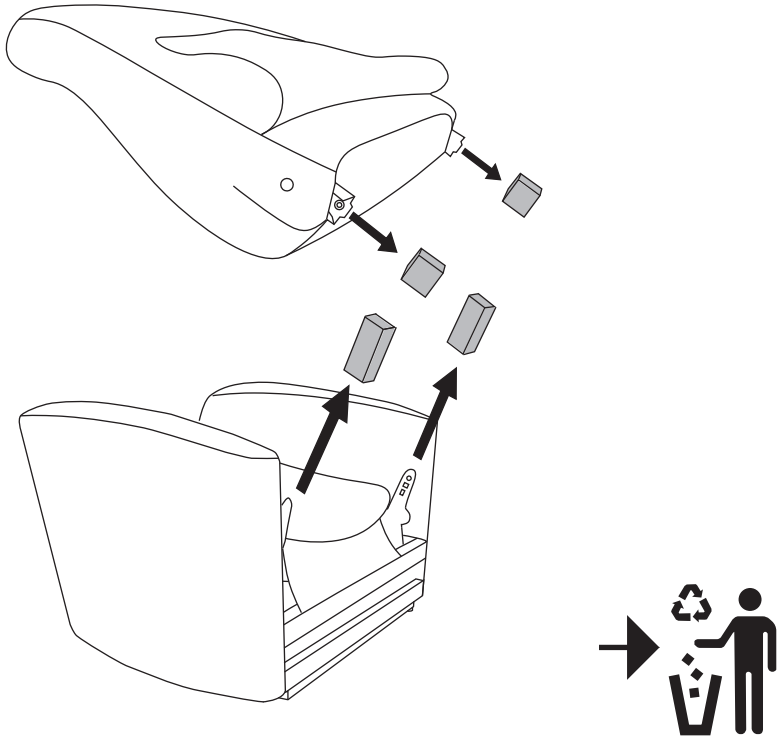

3

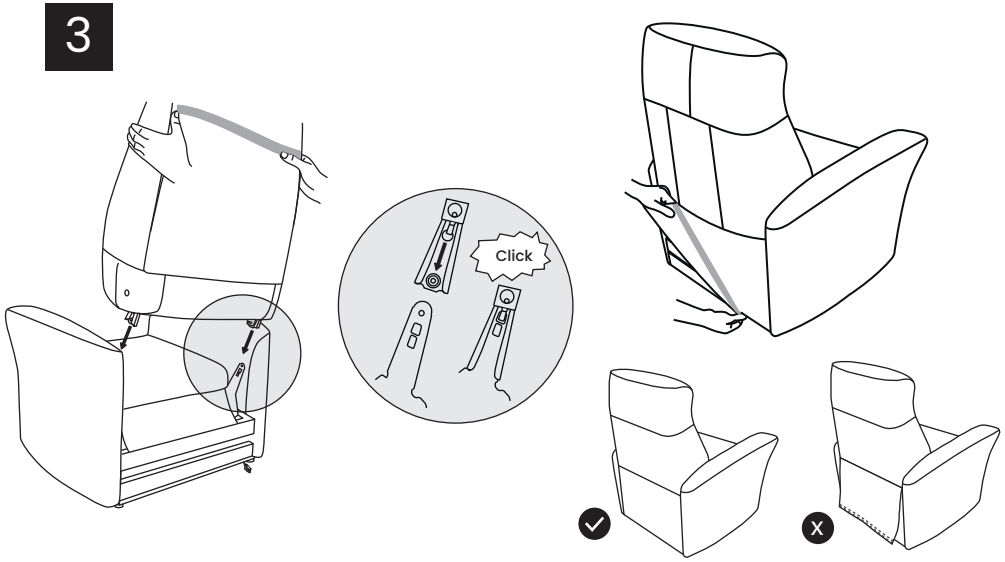

4

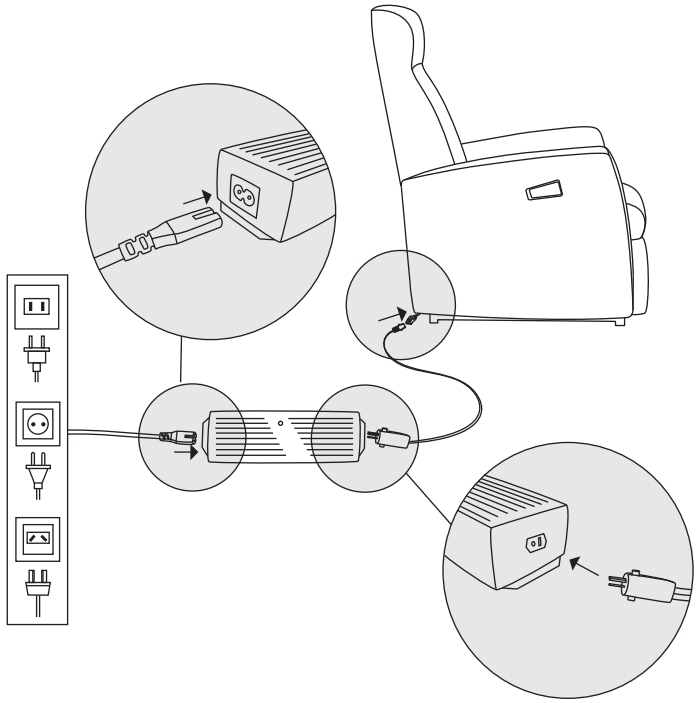

AI47 Multi-Functional Lift Recliner PowerPLUS (MS)_12.05.25

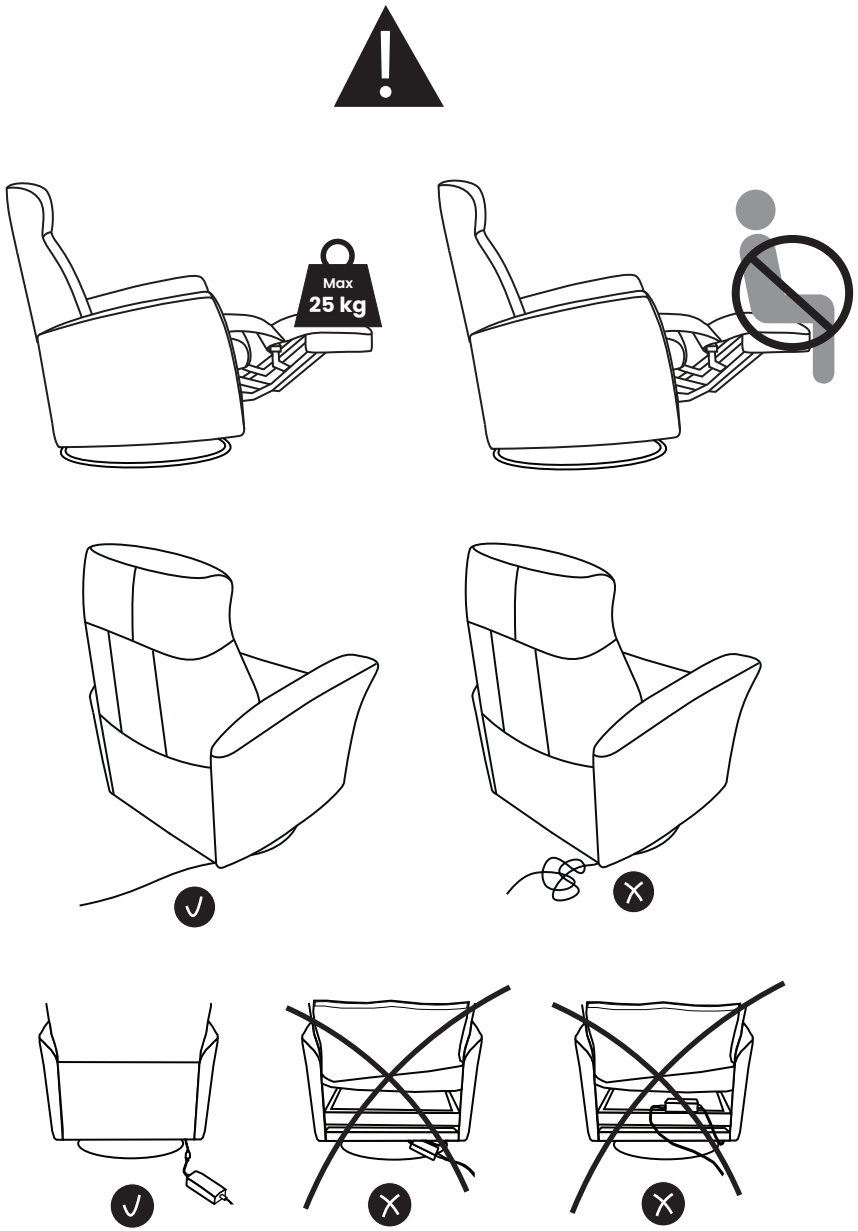

Please visit h2seating.com
or scan QR code for more information

Multi-Functional Lift Recliner

PowerPLUS (MS)

1

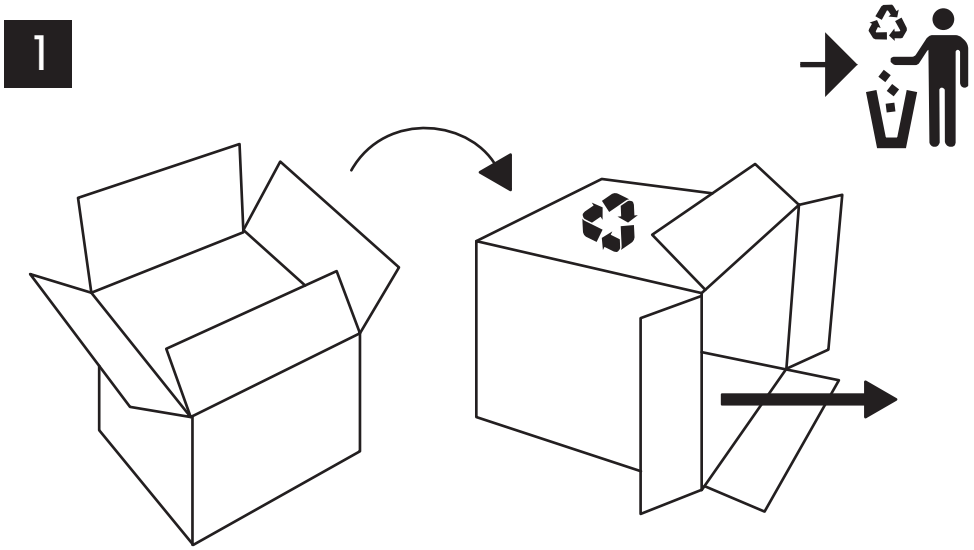

2

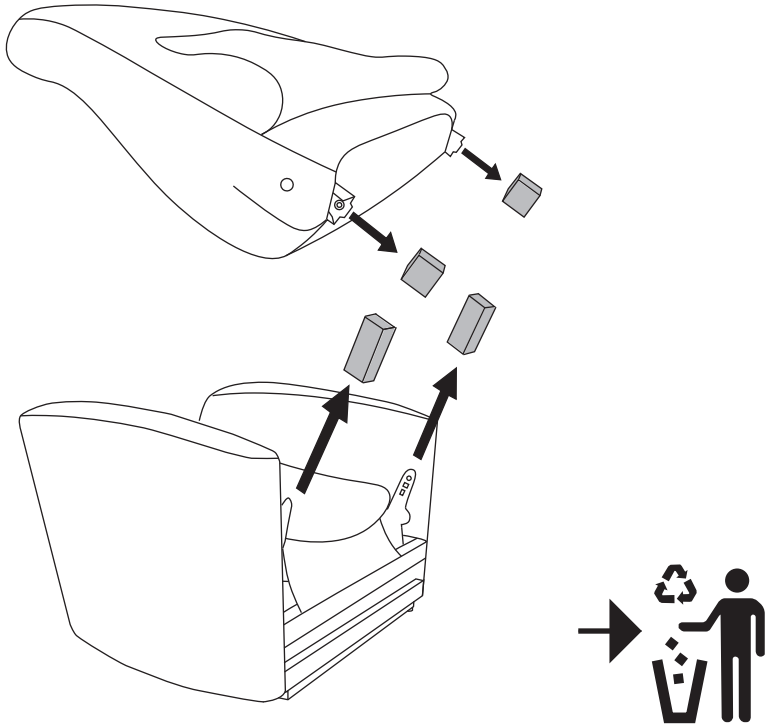

3

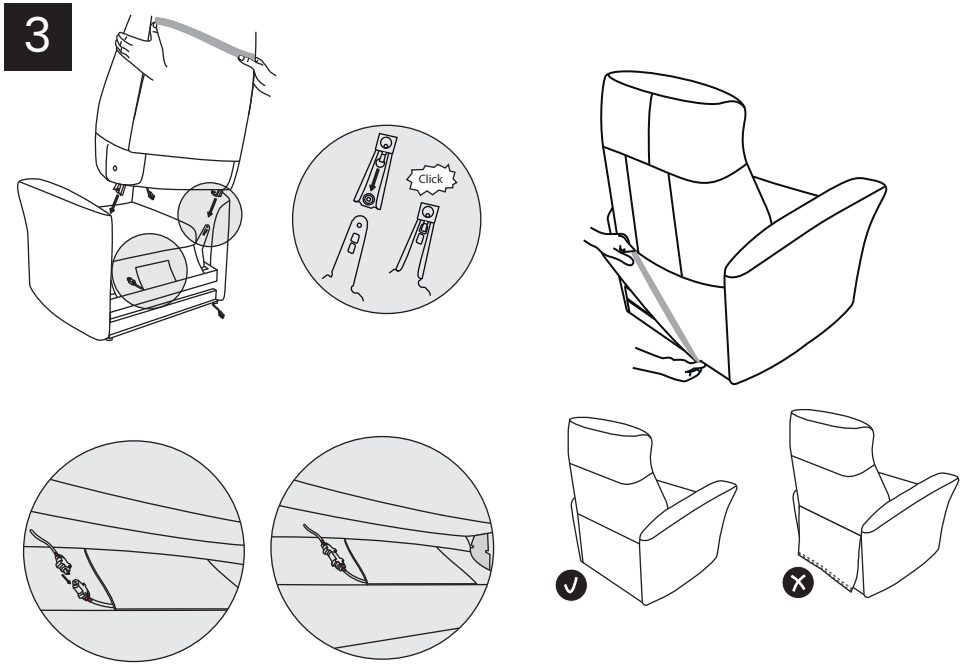

4

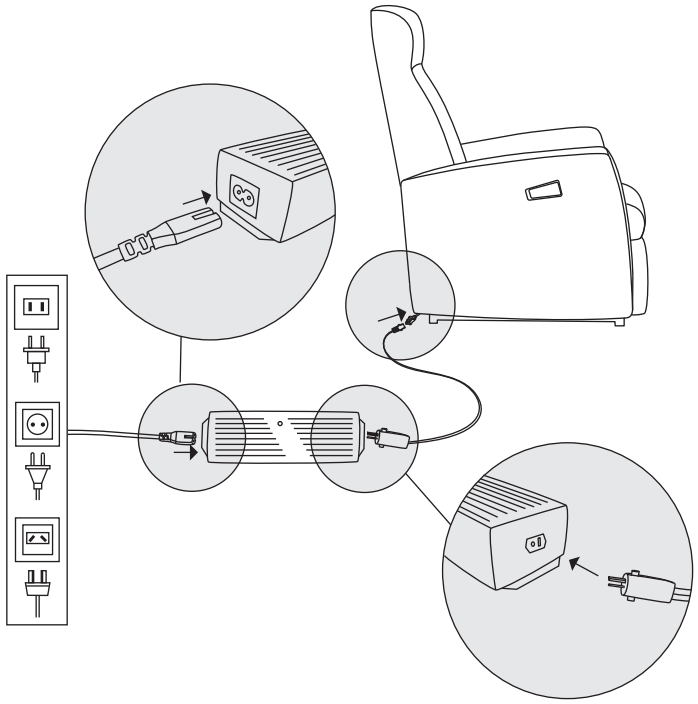

A160 Multi-Functional Lift Recliner PowerLUX (ML)_12.05.25

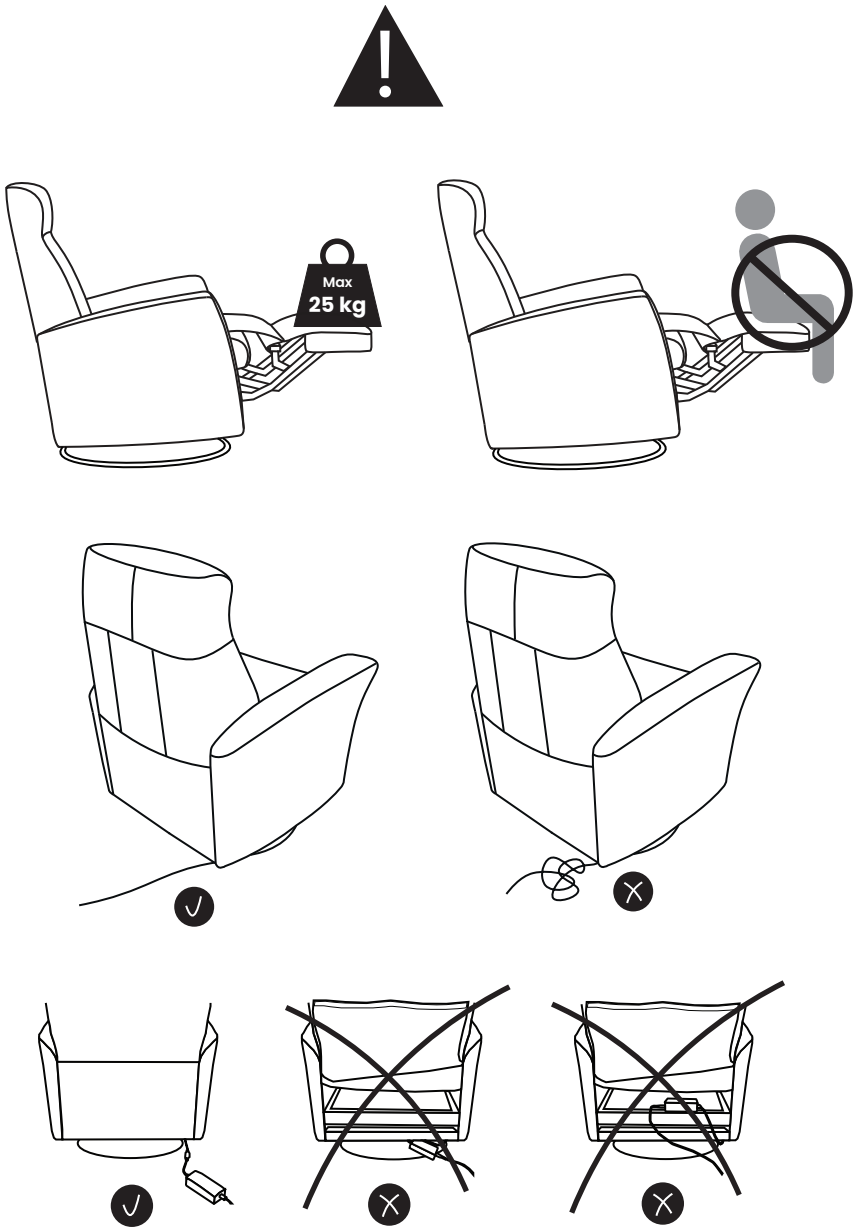

Please visit h2seating.com
or scan QR code for more information

Multi-Functional Lift Recliner

PowerLUX (ML)

1

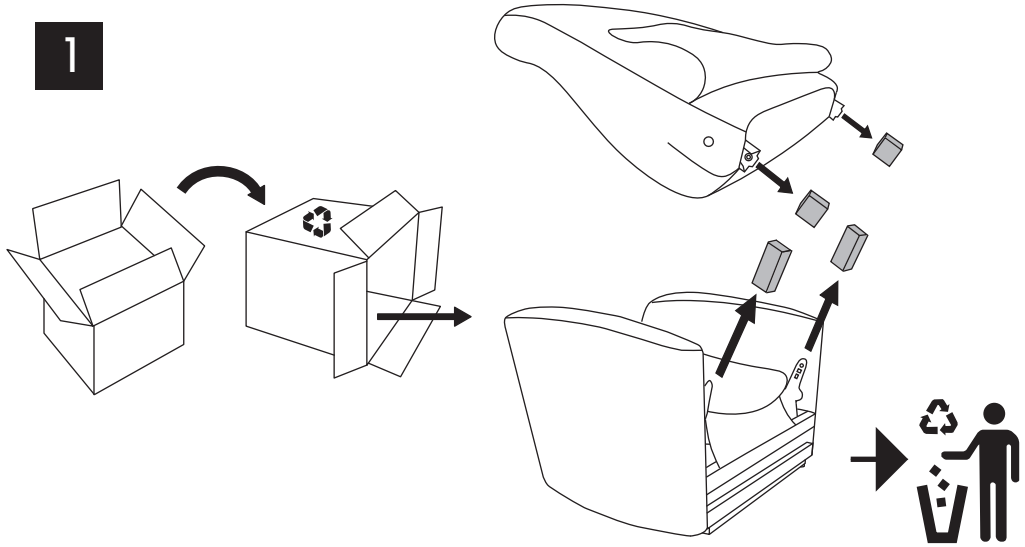

2

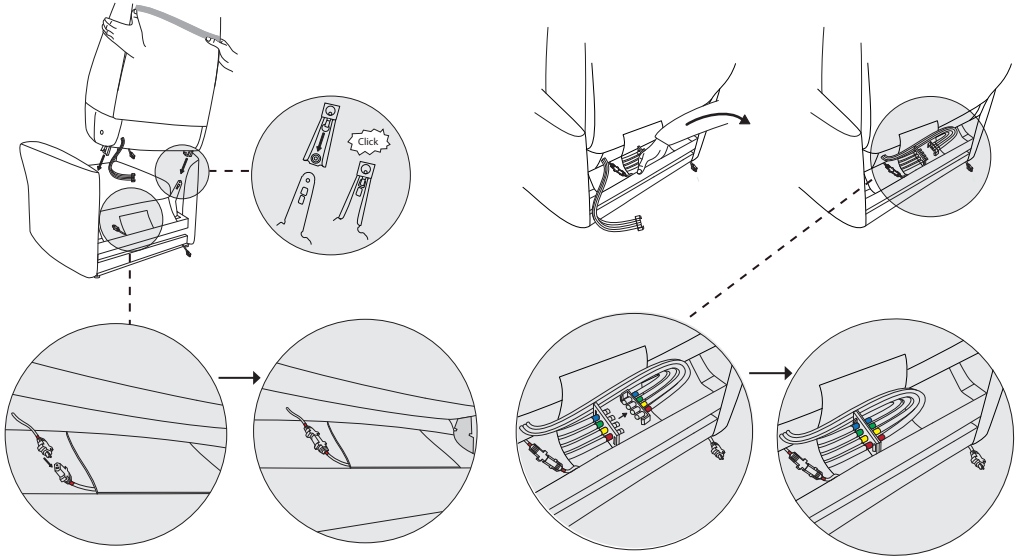

3

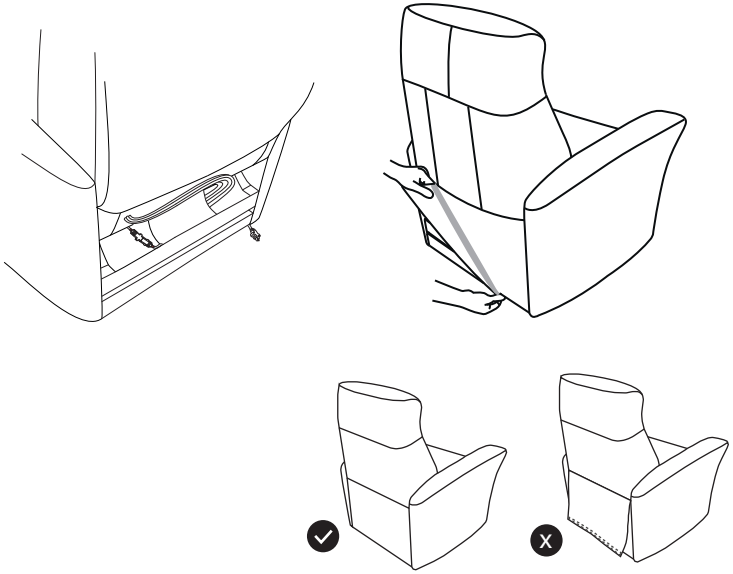

4

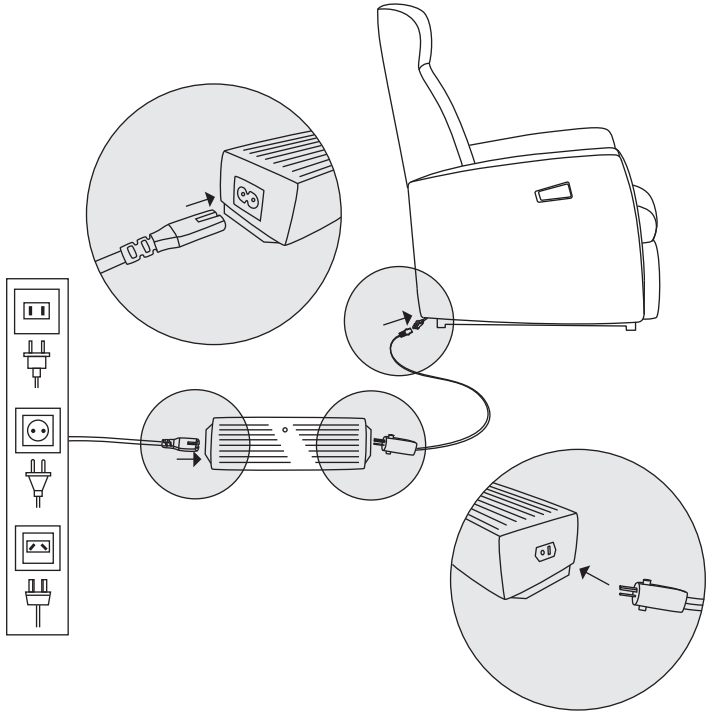

A173 Multi-Functional Lift Recliner Power + (MP+)_12.05.25

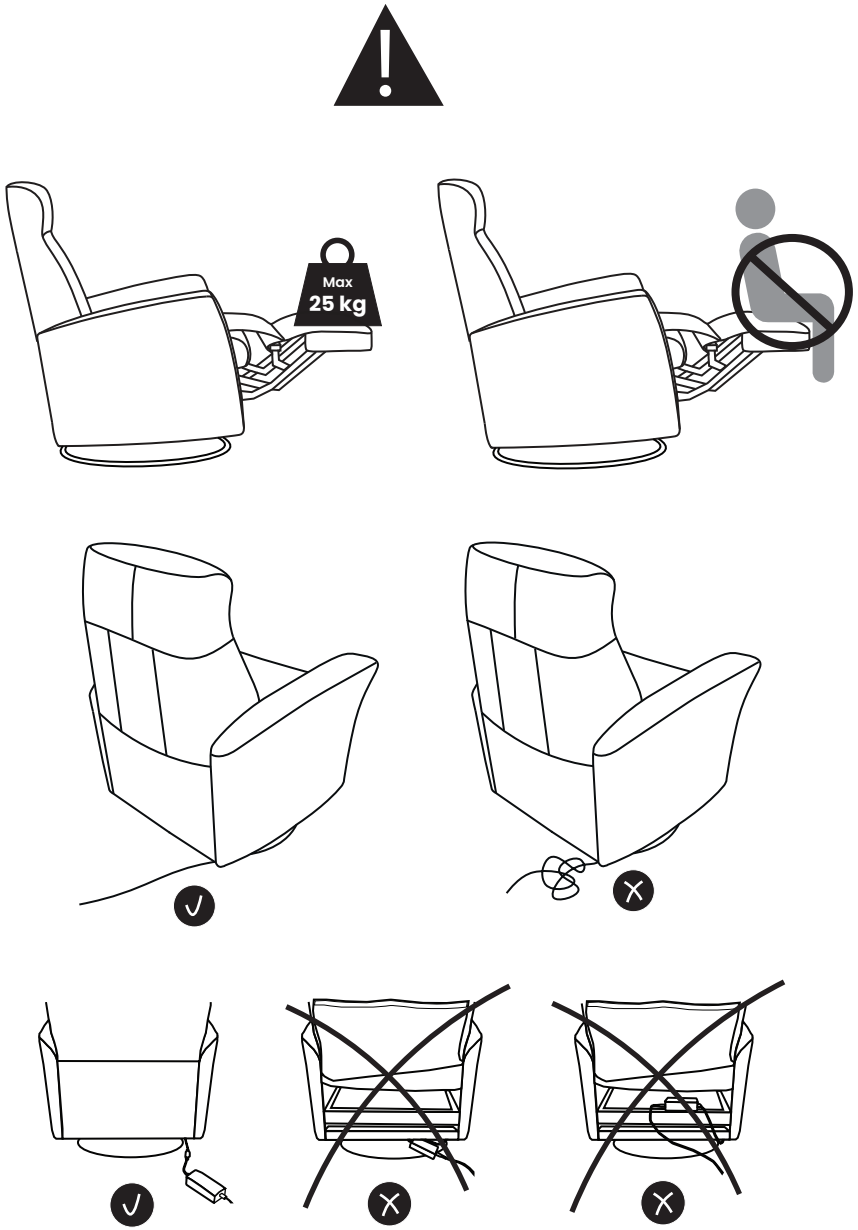

Please visit h2seating.com
or scan QR code for more information

Multi-Functional Lift Recliner

Power+ (MP+)

1

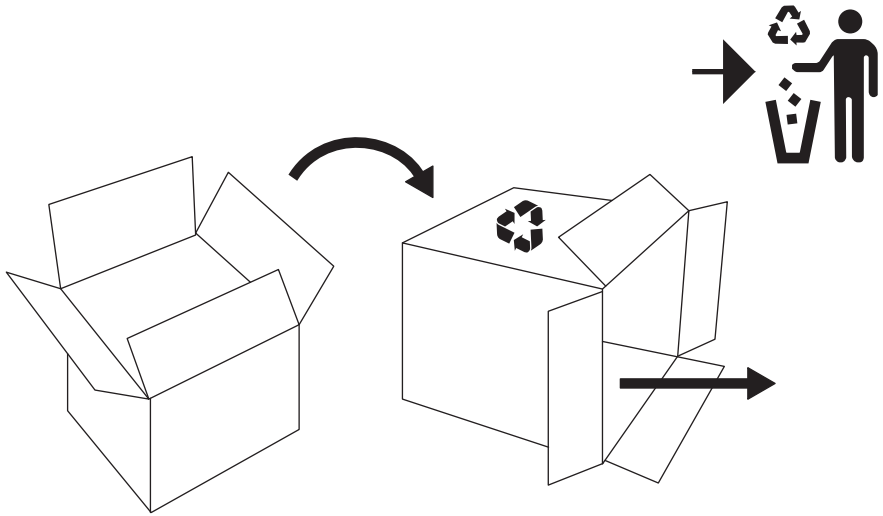

2

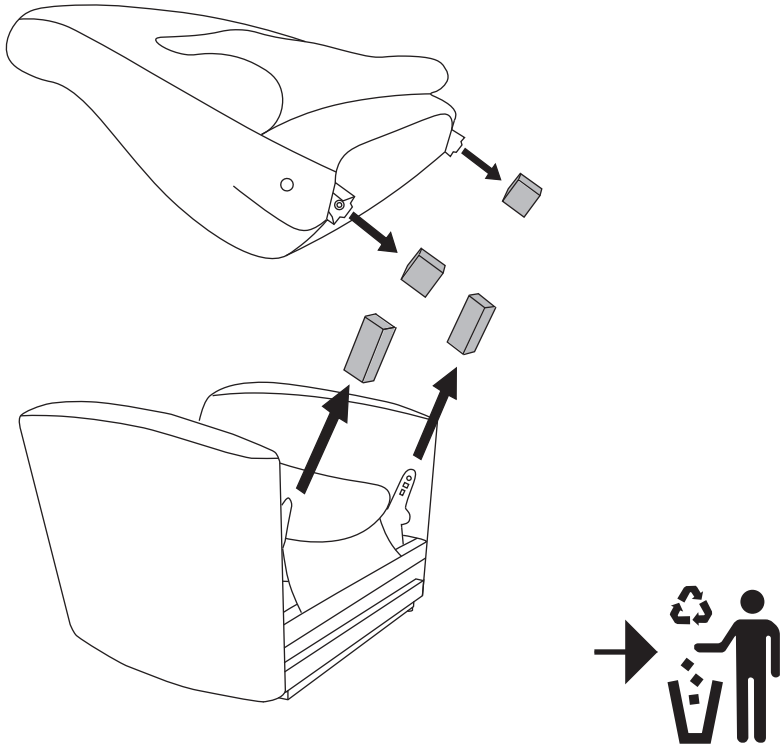

3

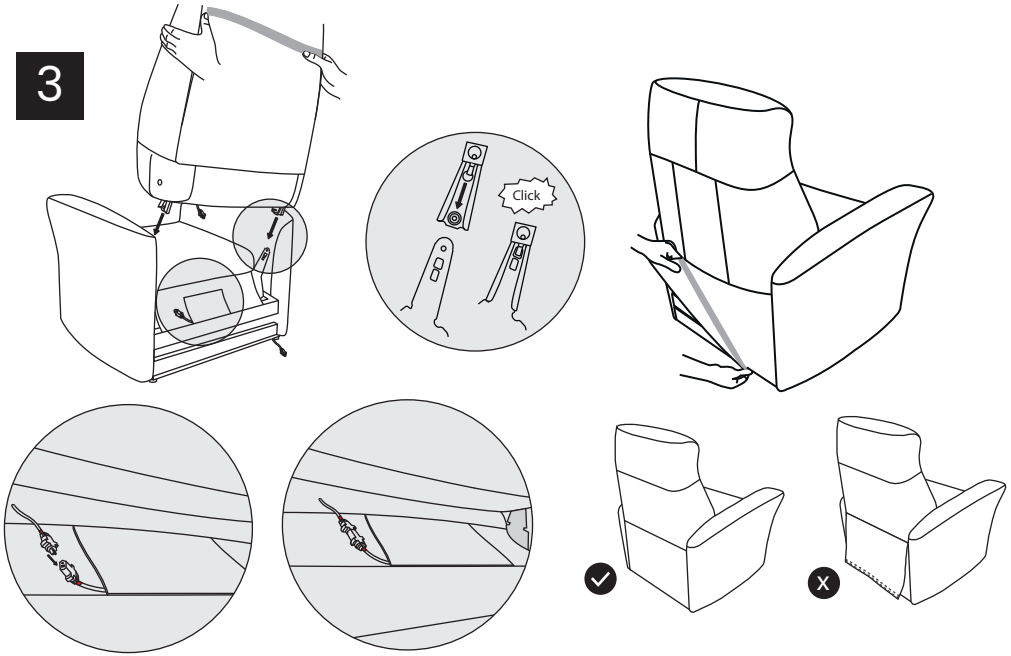

4

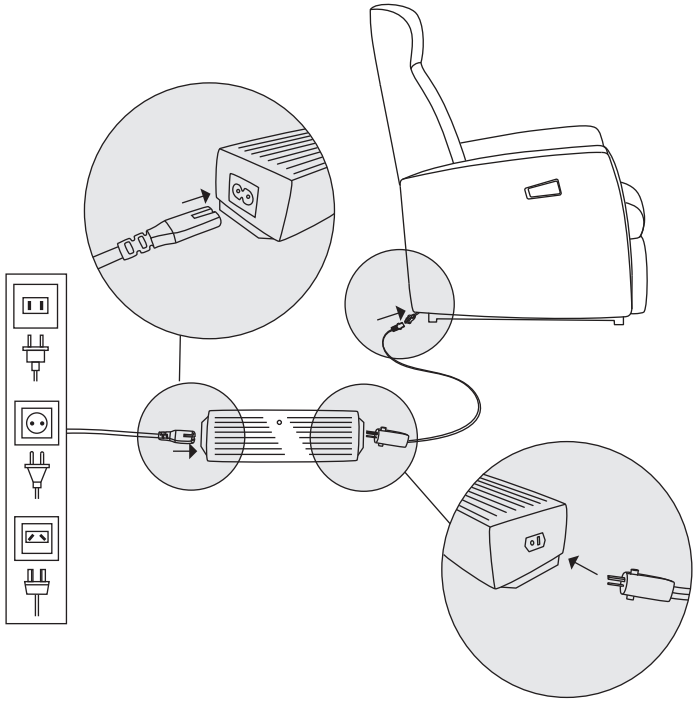

A299 Multi-F Lift Recl. PowerPLUS+ (MS+)_12.05.25

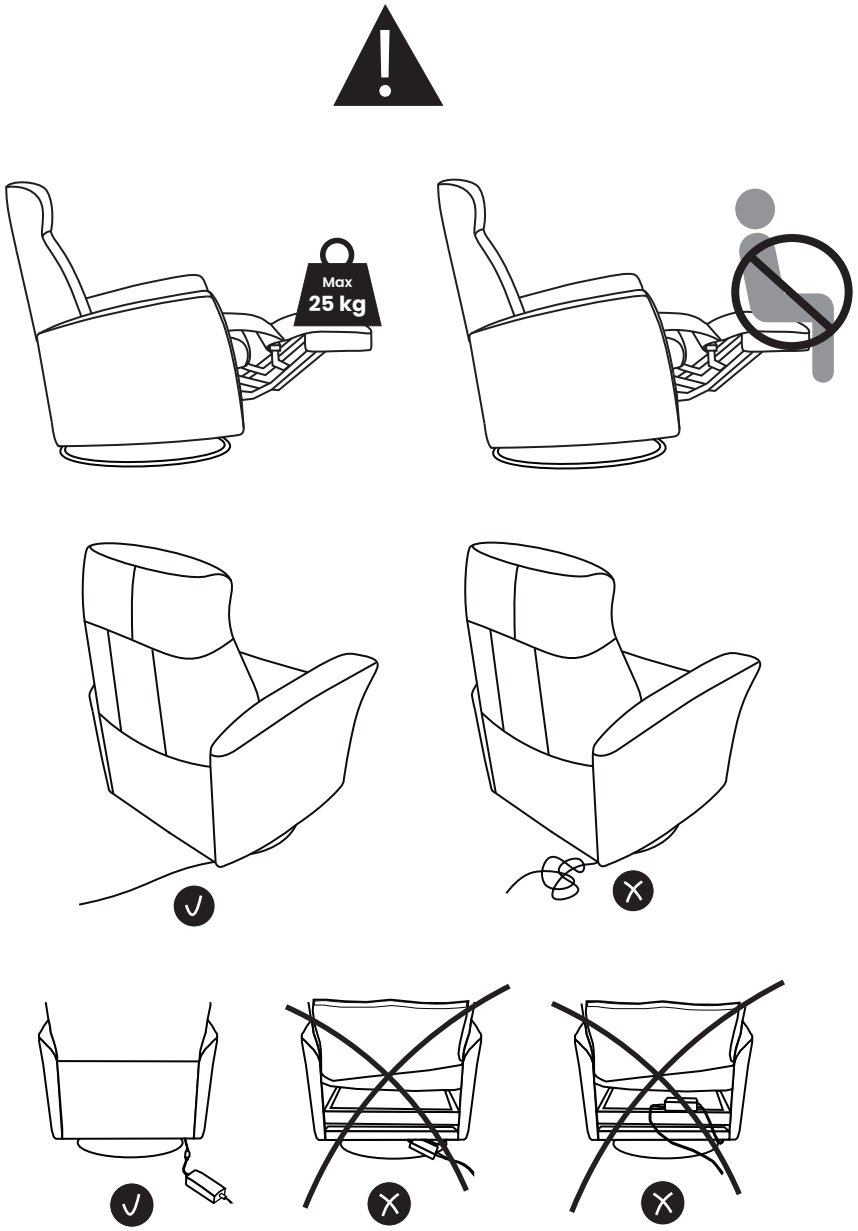

Please visit h2seating.com
or scan QR code for more information

Multi-Functional Lift Recliner

PowerPLUS+ (MS+)

1

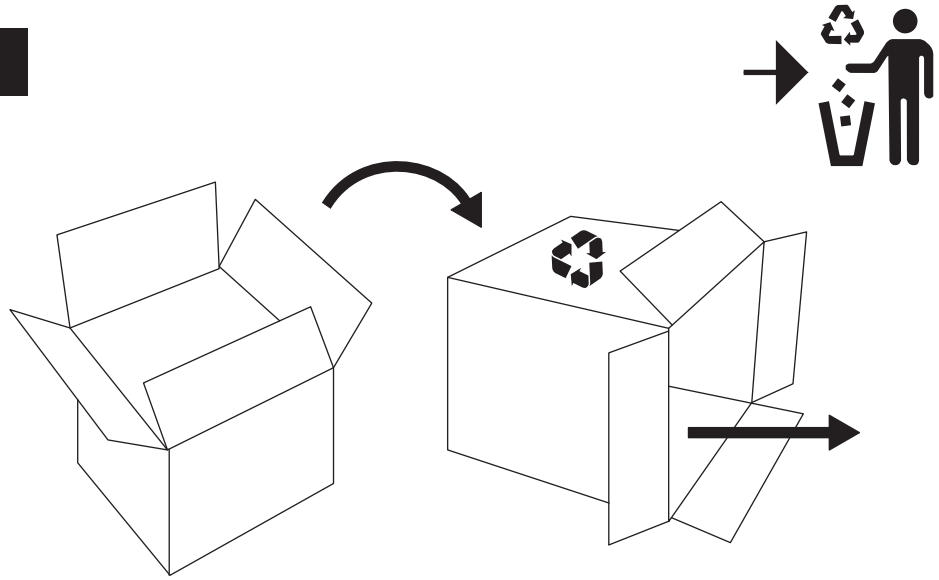

2

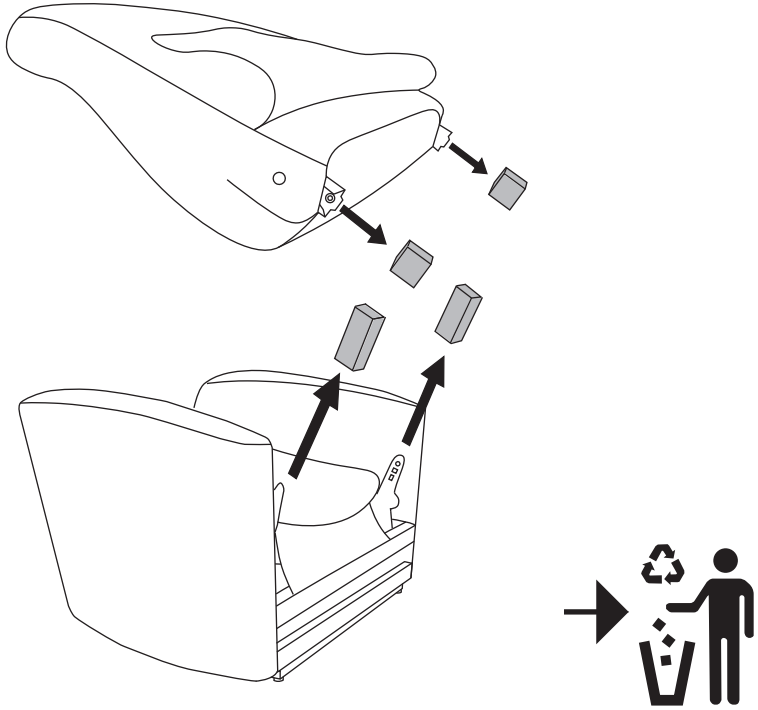

3

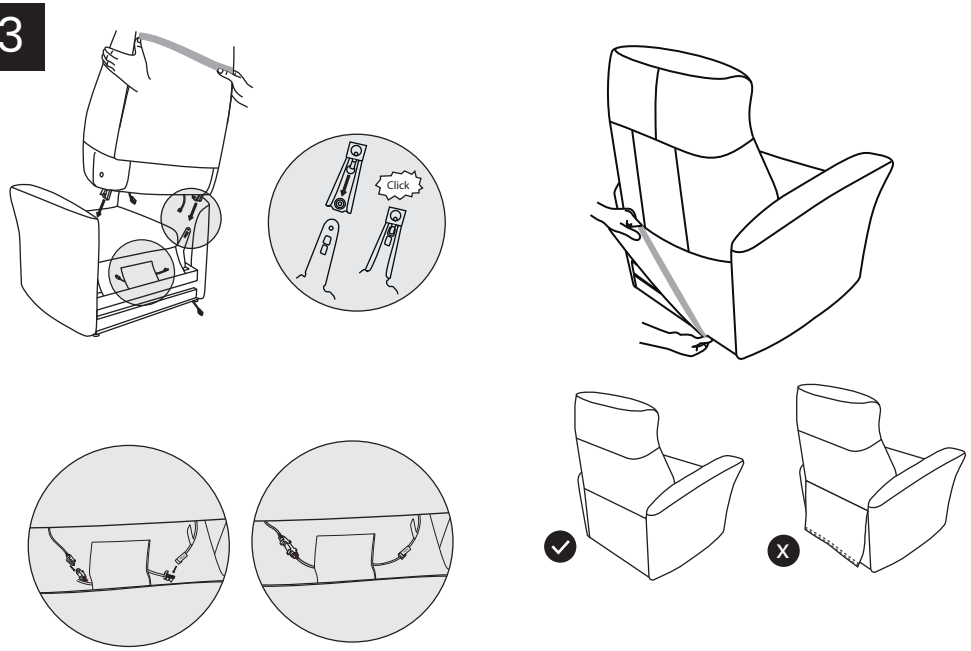

4

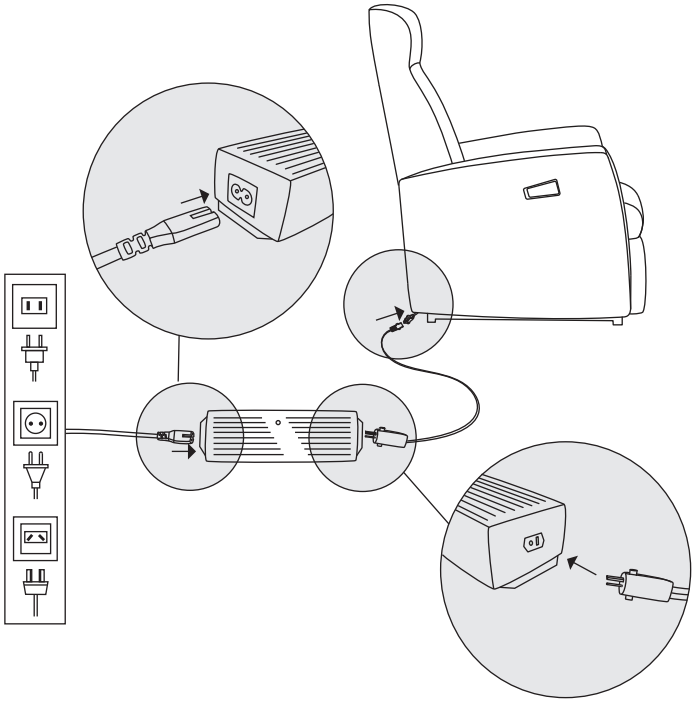

A343 Ultra-Functional Lift Recliner PowerExtra (UX)_17.06.25

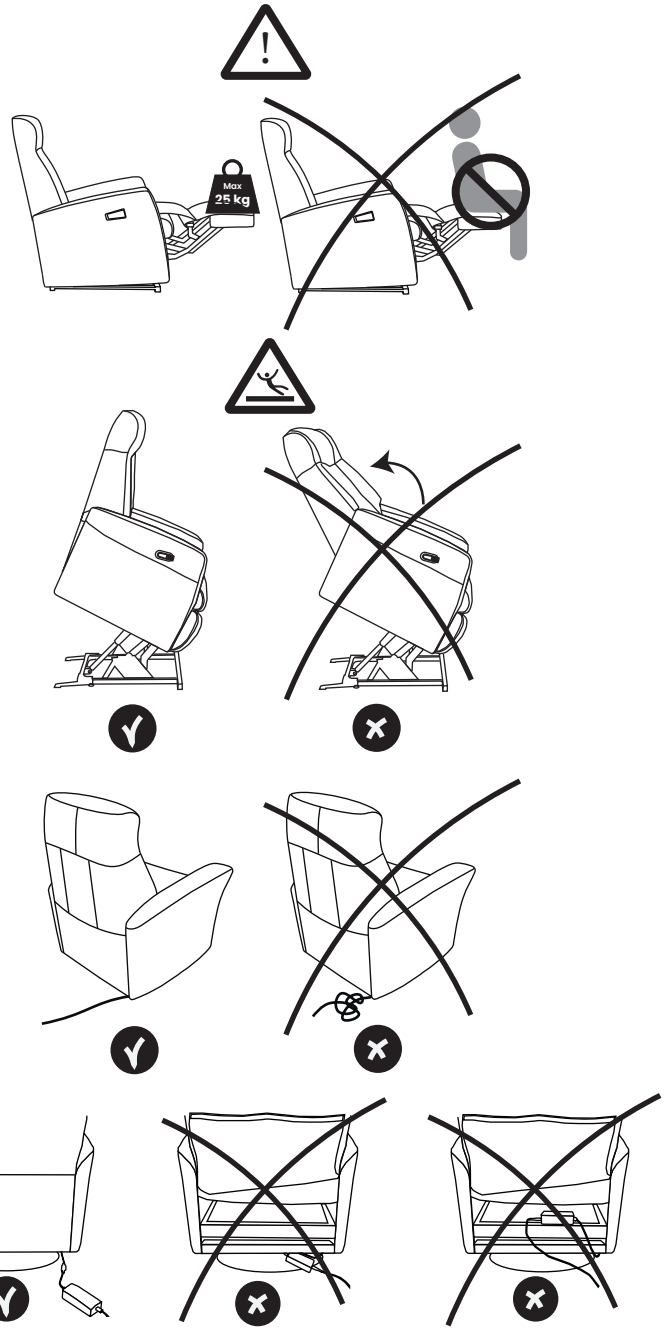

Please visit h2seating.com
or scan QR code for more information

Ultra-Functional Lift Recliner

PowerExtra (UX)

1

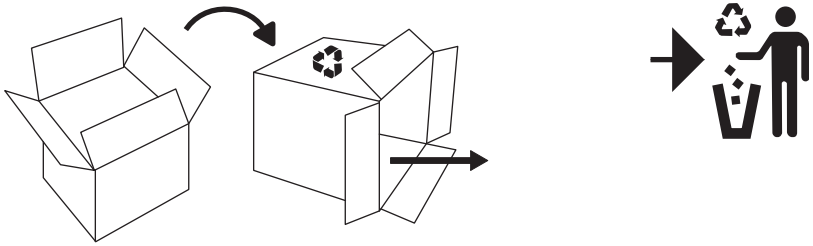

2

	x2	Bolt 44mm
	x2	Locking Nut
	1	Key Wrench No.11

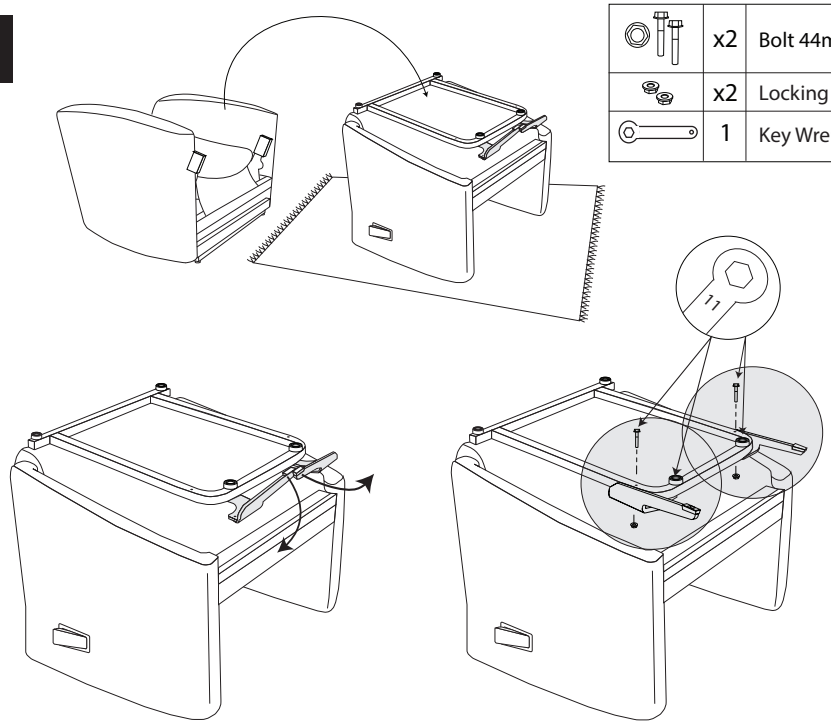

3

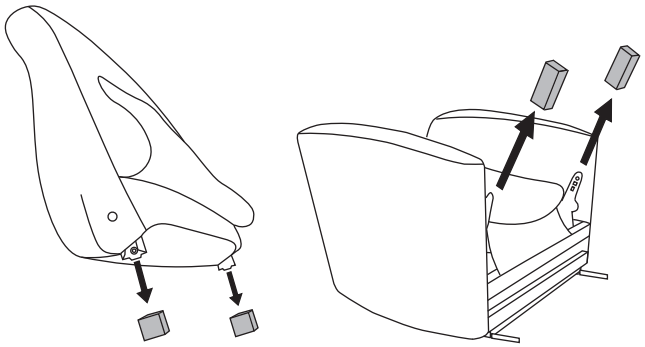

4

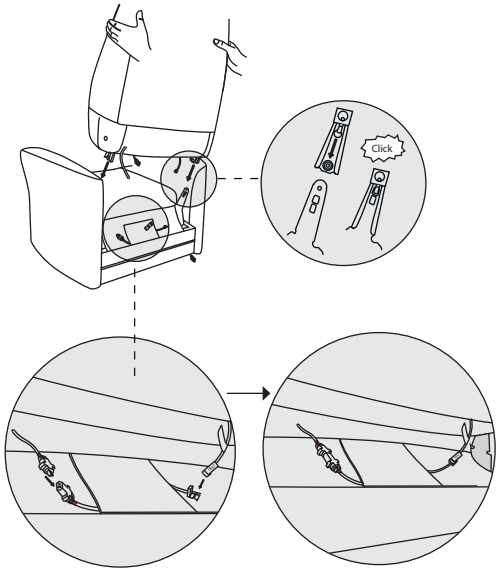

5

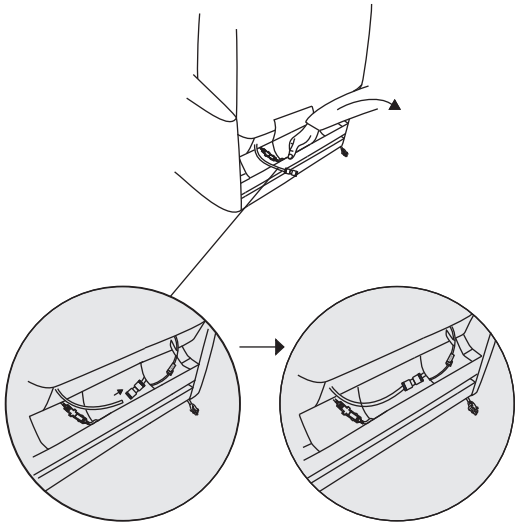

6

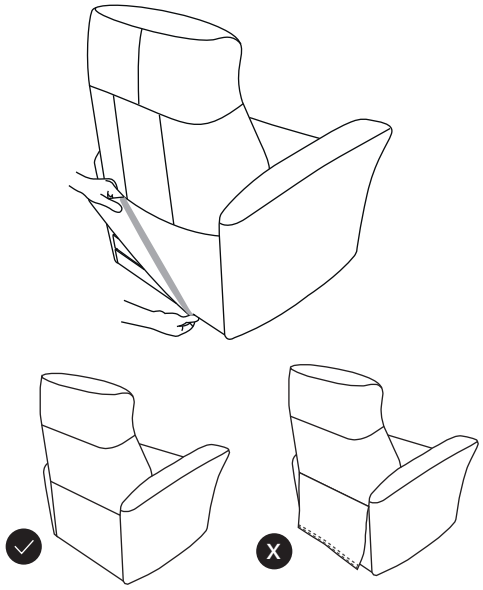

7

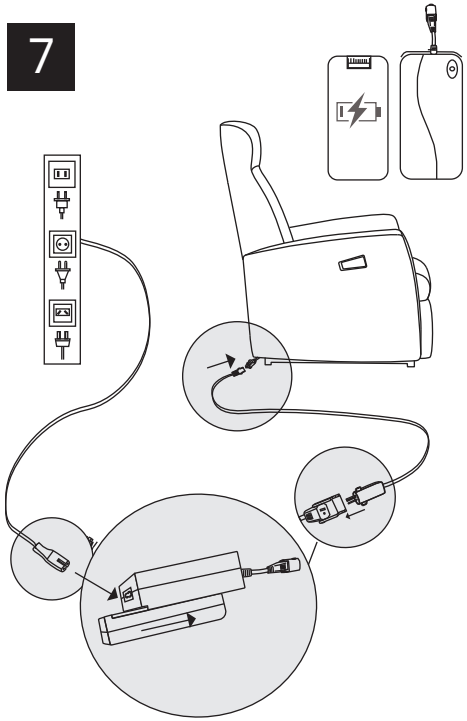

A344 Ultra-Functional Lift Recliner PowerLUX (UL)_17.06.25

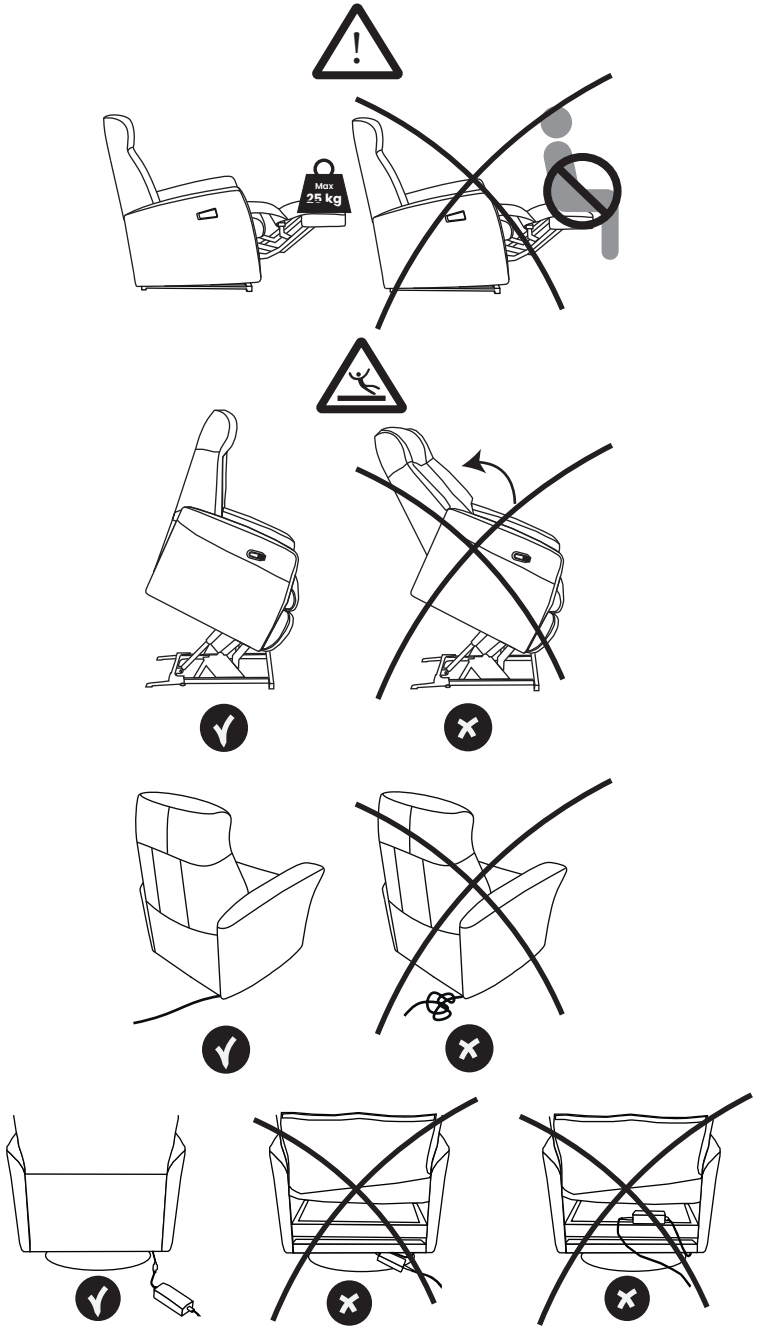

Please visit h2seating.com
or scan QR code for more information

Ultra-Functional Lift Recliner

PowerLUX (UL)

1

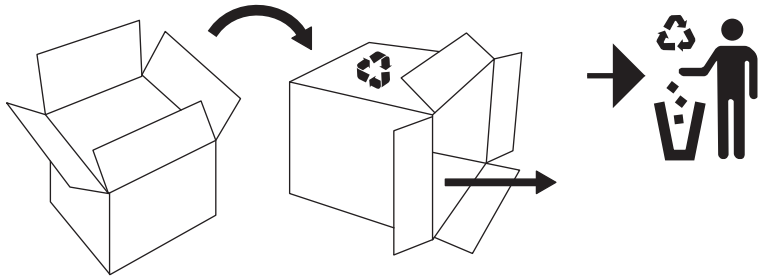

2

	x2	Bolt 44mm
	x2	Locking Nut
	1	Key Wrench No.11

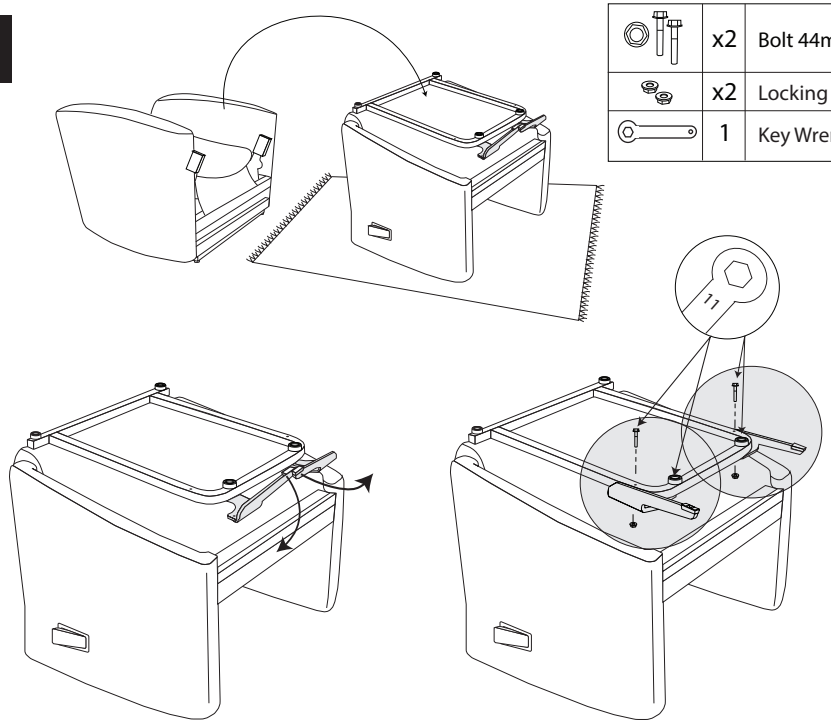

3

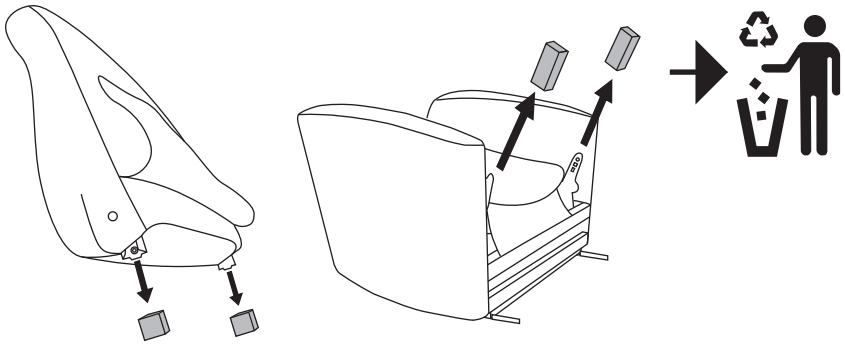

4

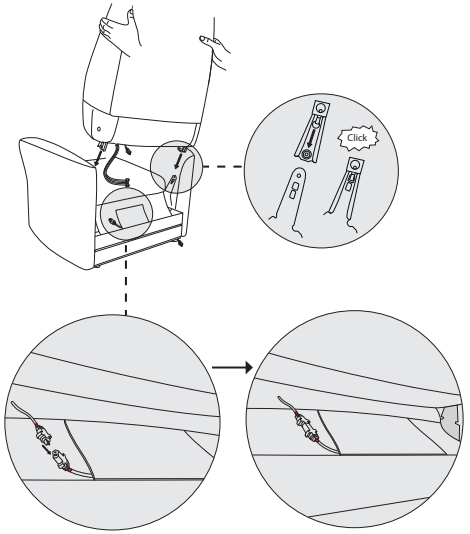

5

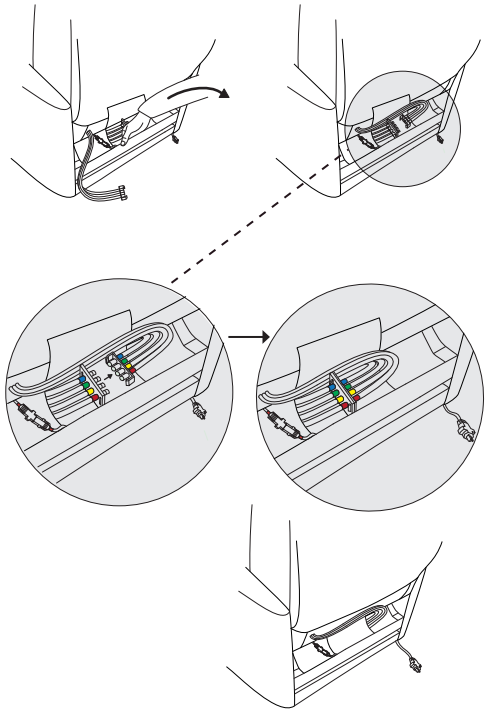

6

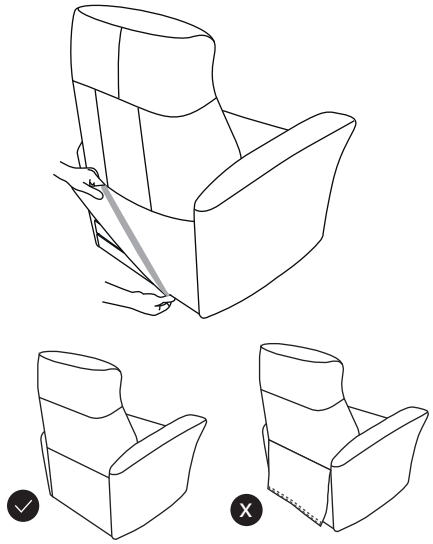

7

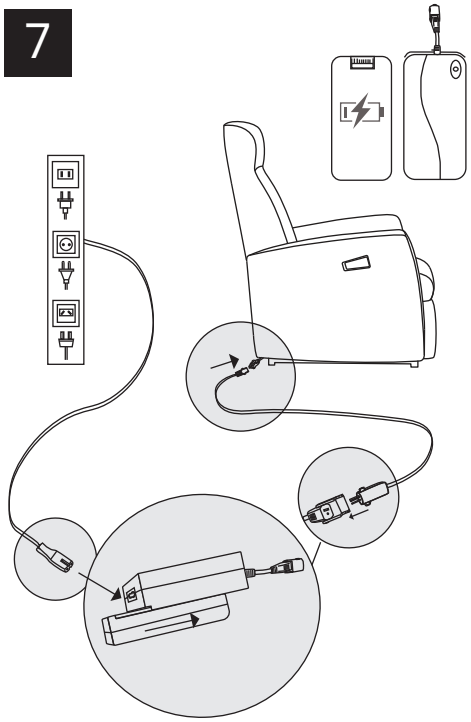

A345 Ultra-Functional Lift Recl. PowerPLUS+ (US+)_17.06.25

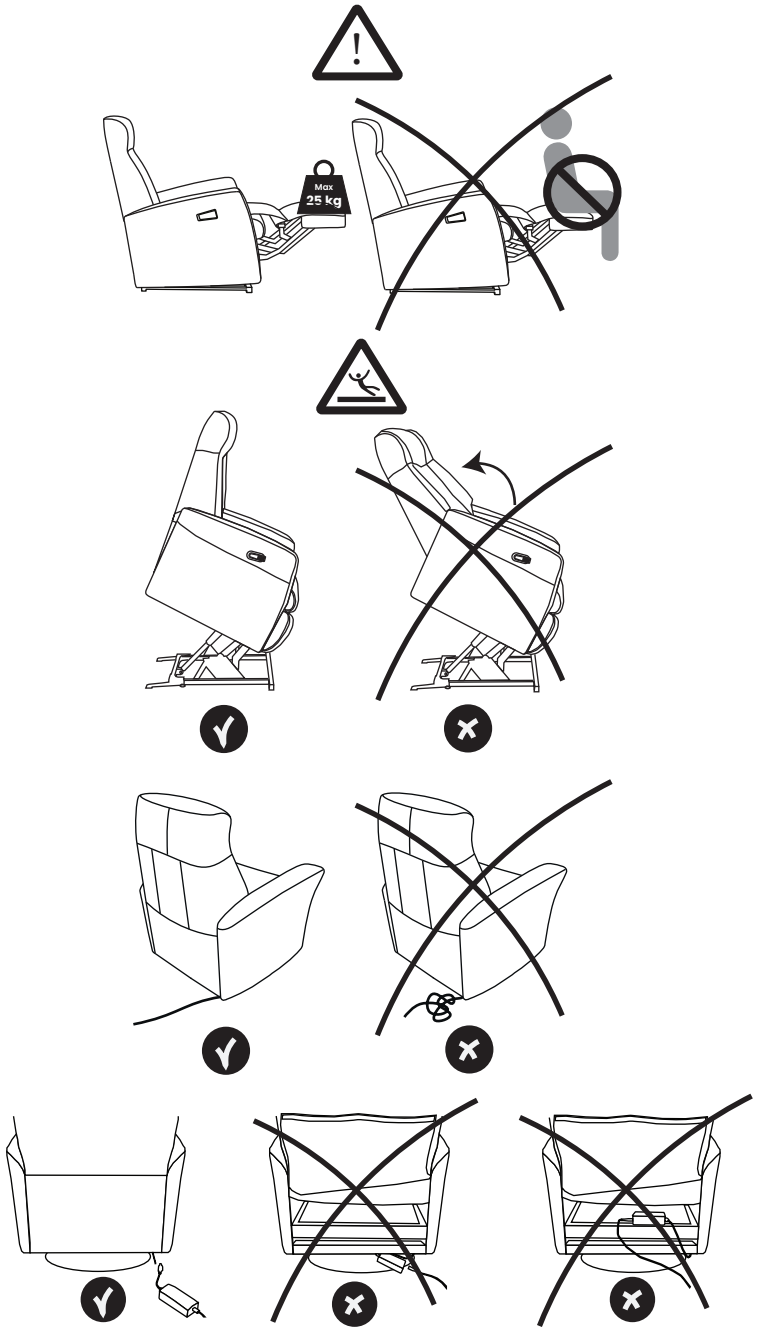

Please visit h2seating.com
or scan QR code for more information

Ultra-Functional Lift Recliner

PowerPLUS+ (US+)

1

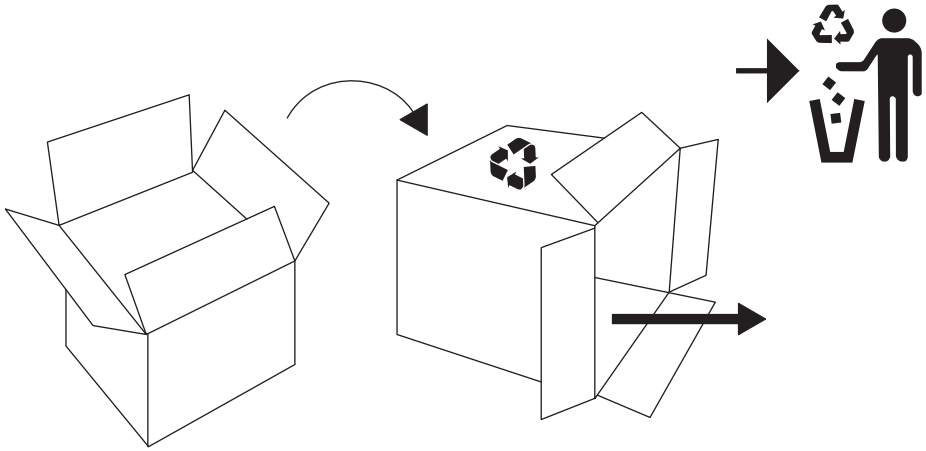

2

	x2	Bolt 44mm
	x2	Locking Nut
	1	Key Wrench No.11

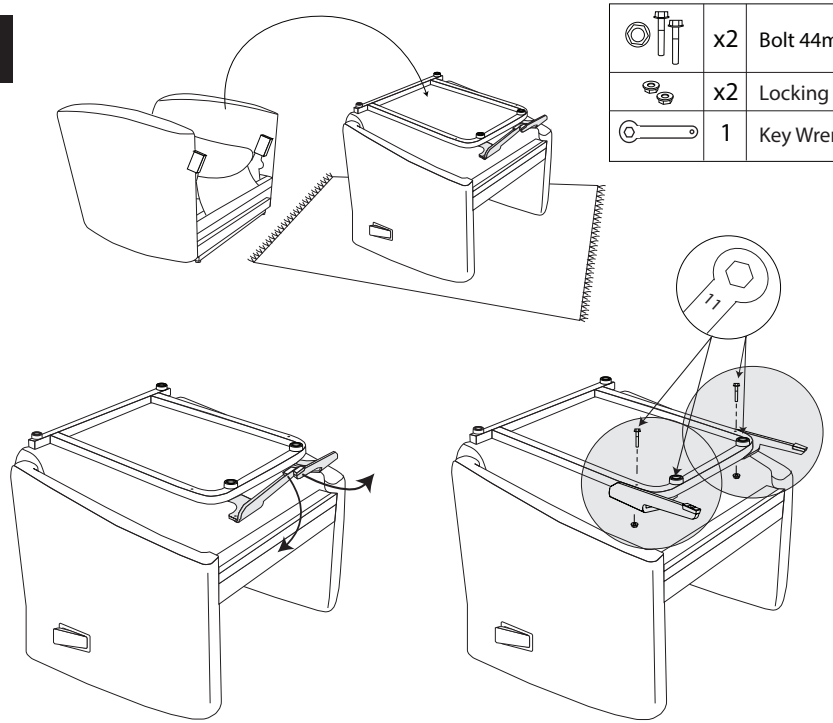

3

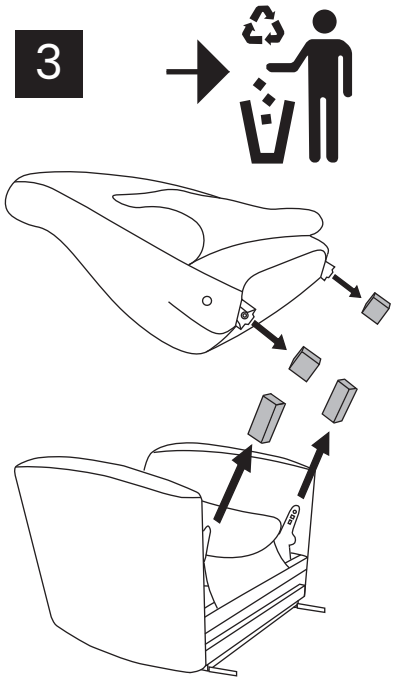

4

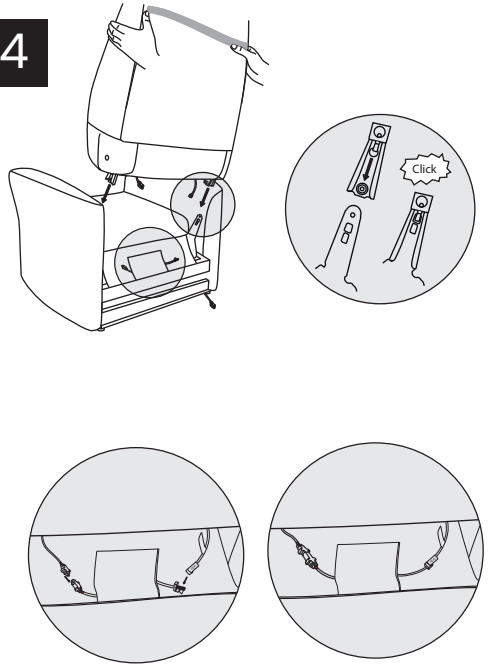

5

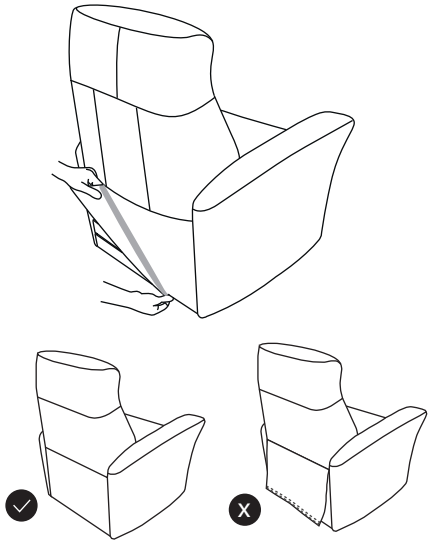

6

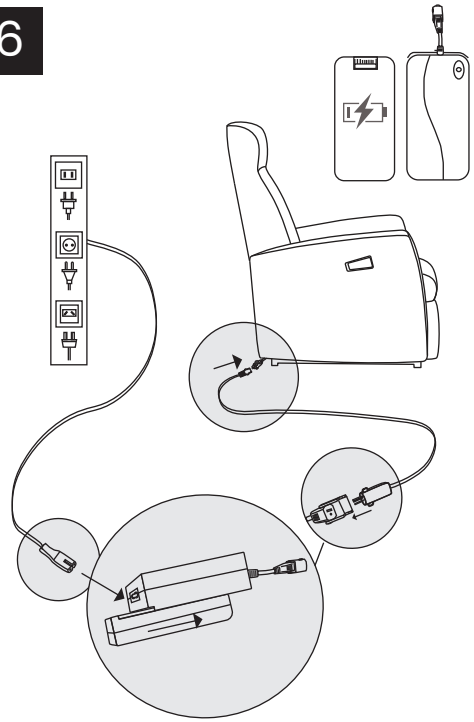

A346 Ultra-Functional Lift Recliner Power+(UP+)_29.07.25

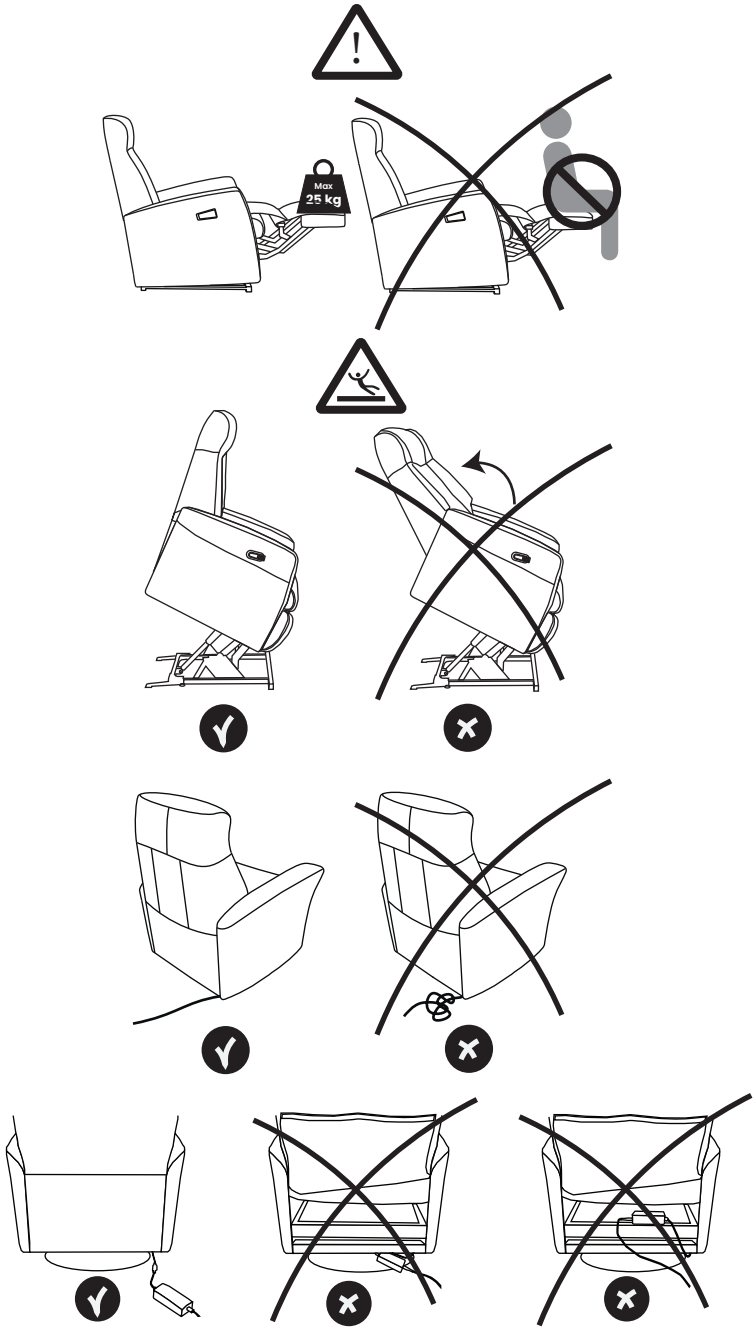

Please visit h2seating.com
or scan QR code for more information

Ultra-Functional Lift Recliner

Power+ (UP+)

1

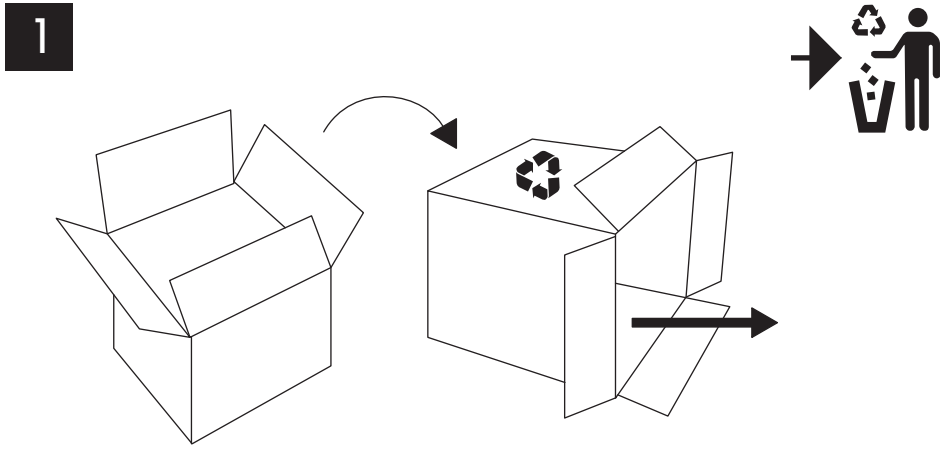

2

	x2	Bolt 44mm
	x2	Locking Nut
	1	Key Wrench No.11

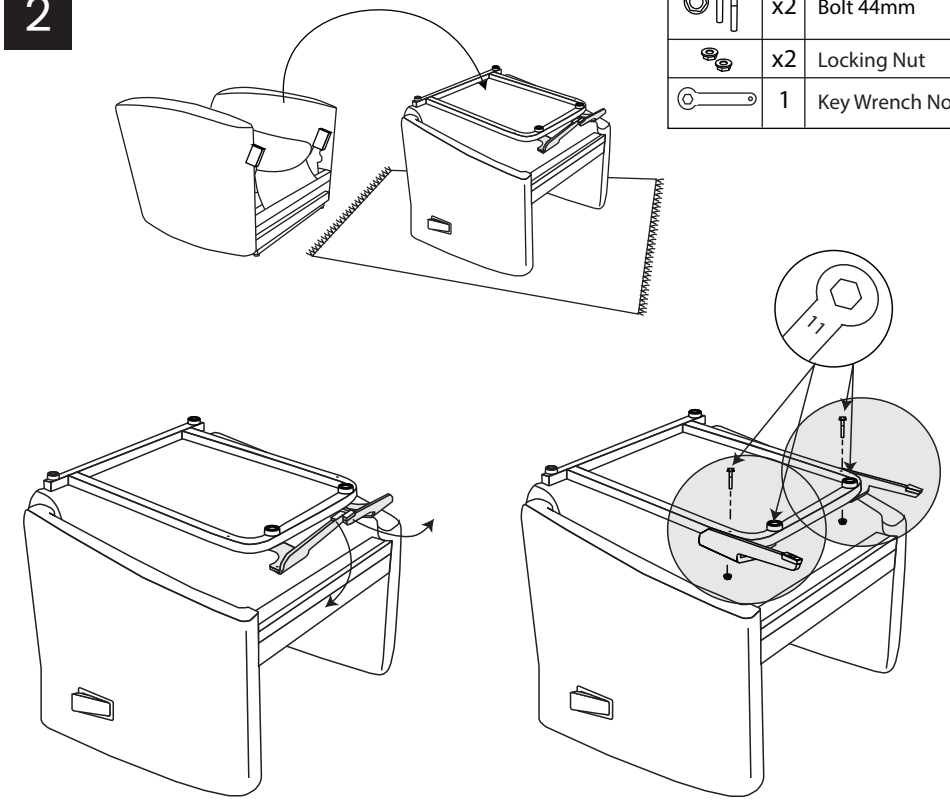

3

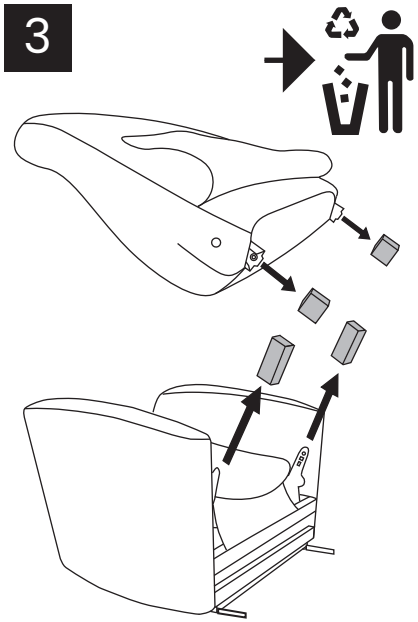

4

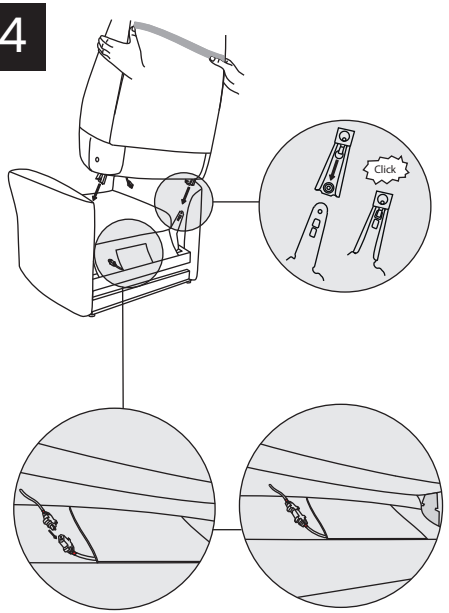

5

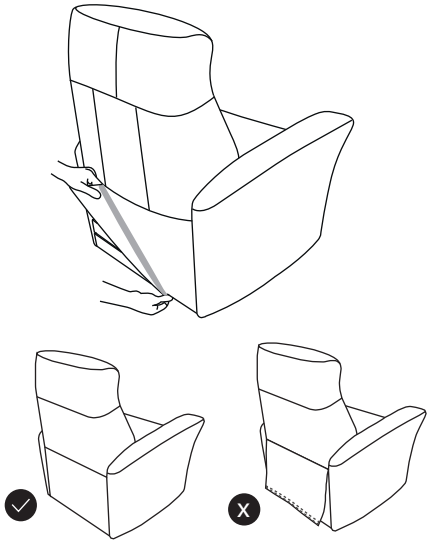

6

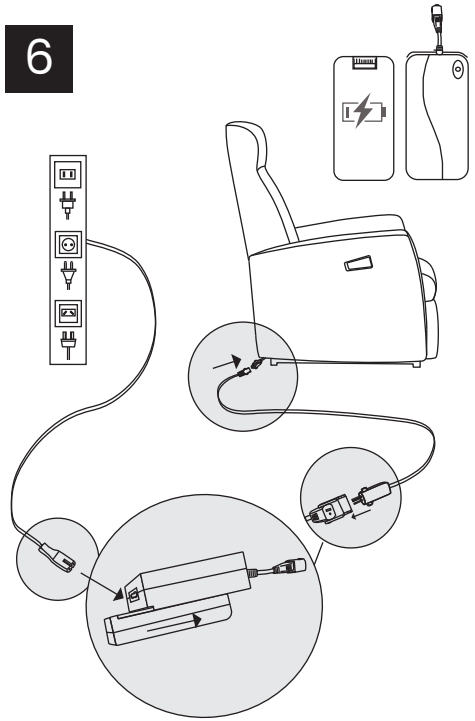

A347 Multi-Functional Lift Recliner PowerExtra (MX)_12.05.25

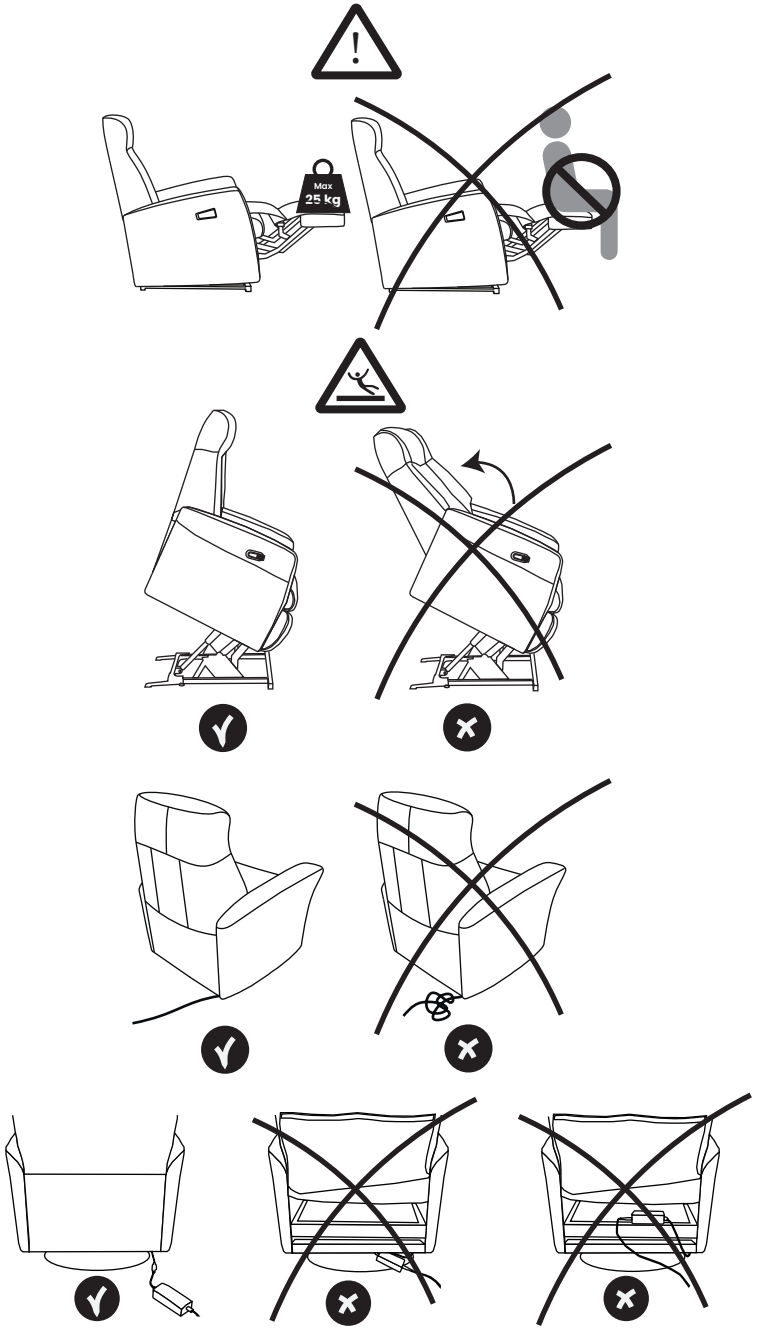

Please visit h2seating.com
or scan QR code for more information

Multi-Functional Lift Recliner

PowerExtra (MX)

1

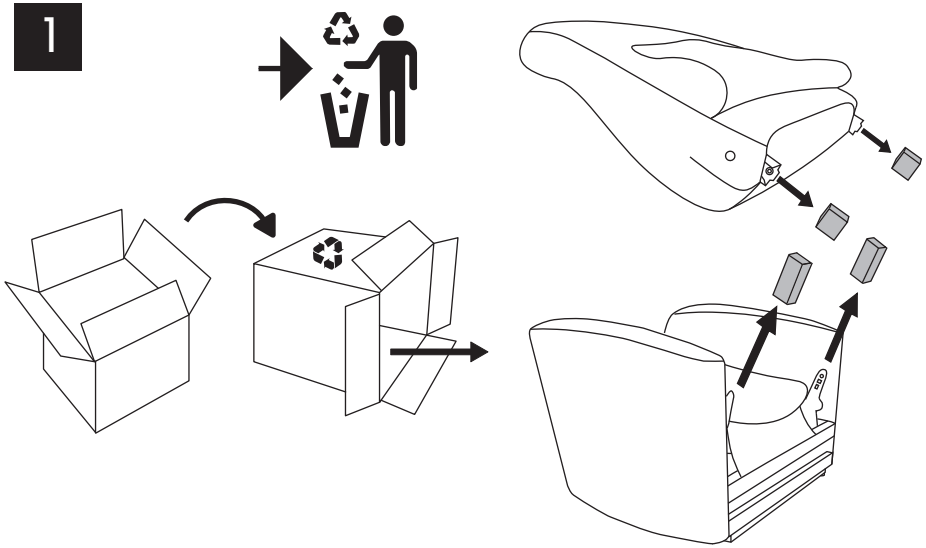

2

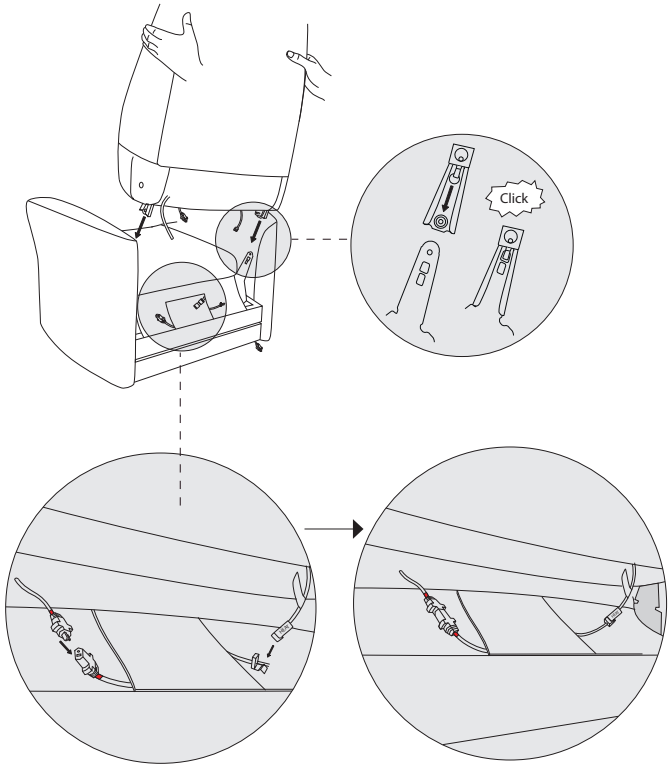

3

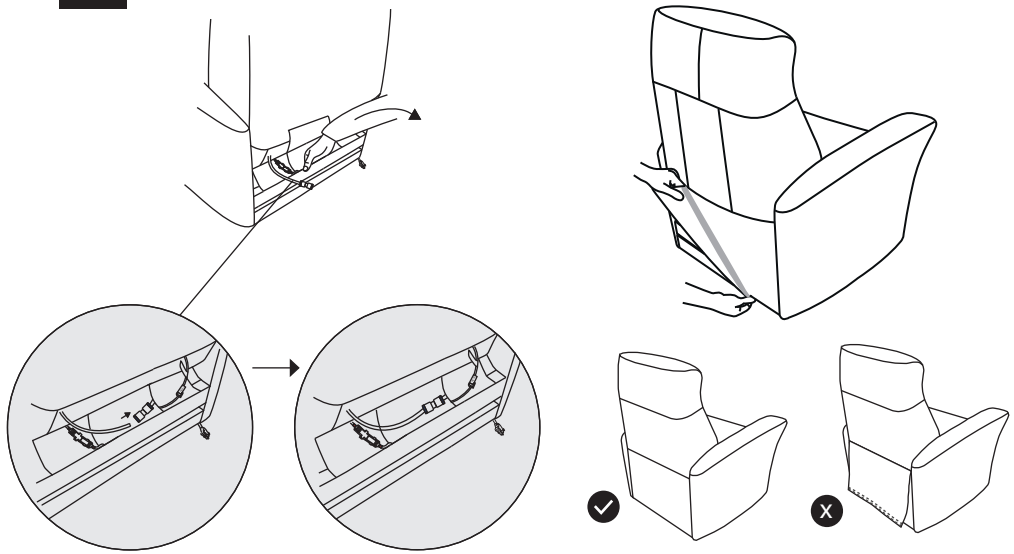

4

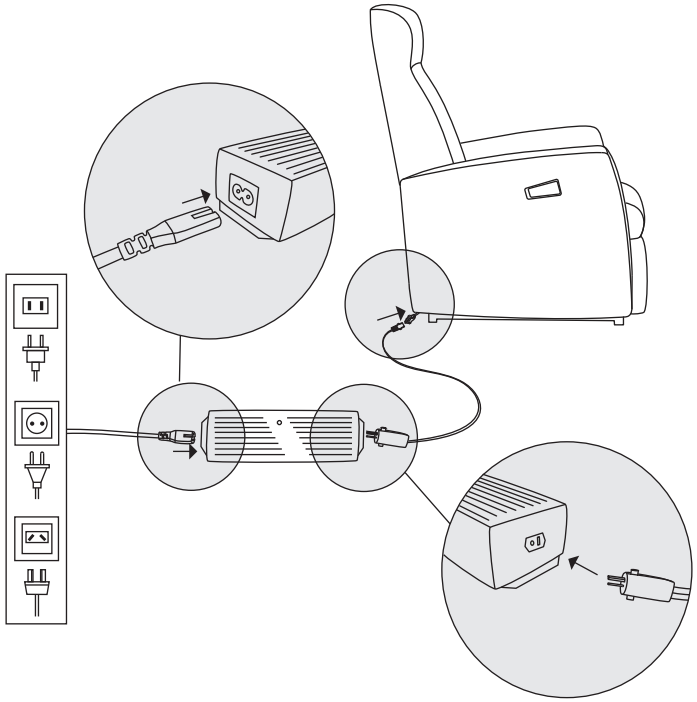

A218 Zero Gravity Power LUX (ZL)_H2 Logo_12.05.25

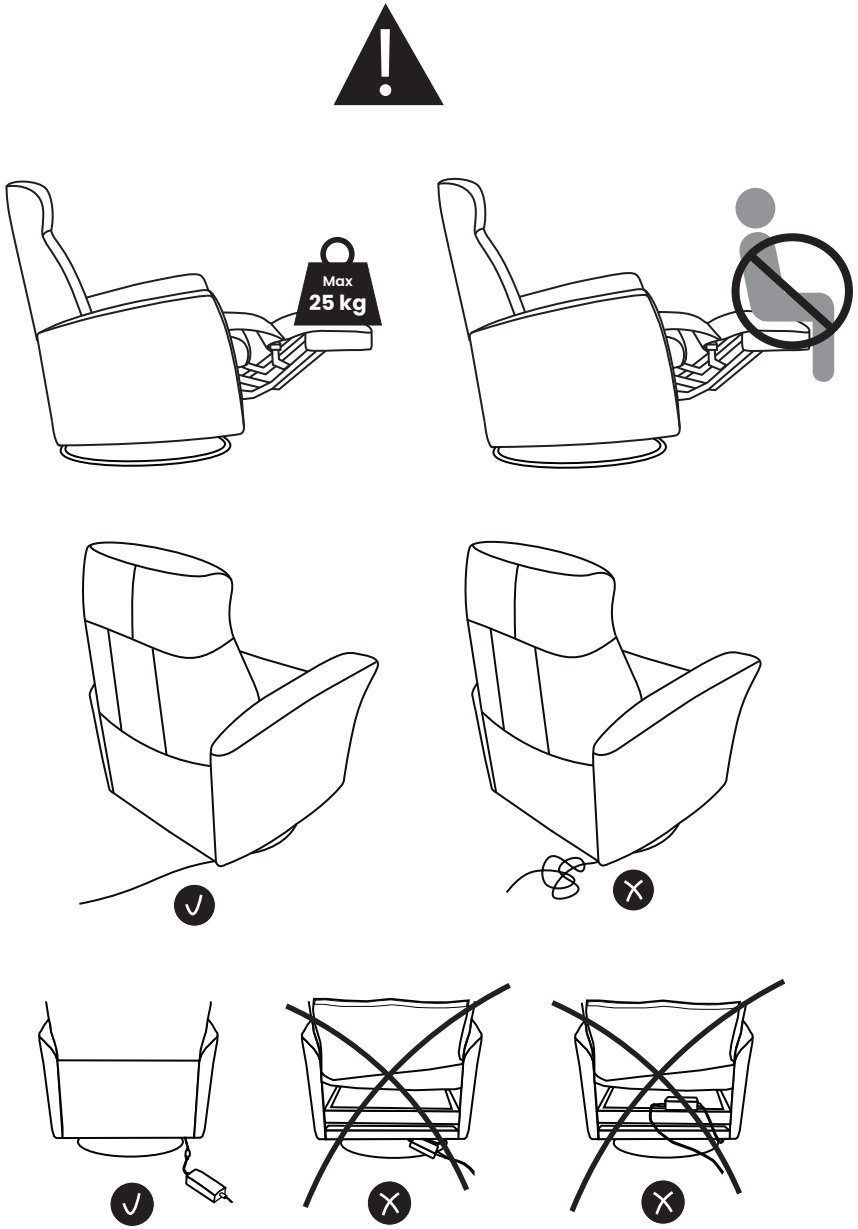

Please visit h2seating.com
or scan QR code for more information

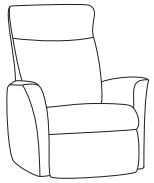

Zero Gravity
PowerLUX (ZL)

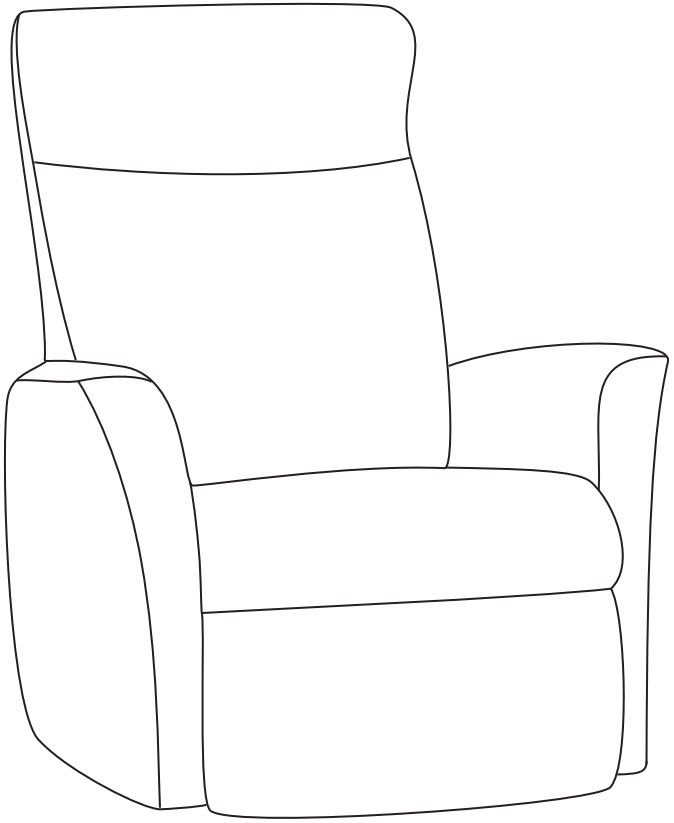

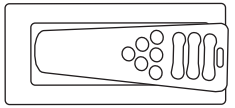

PowerLUX

1

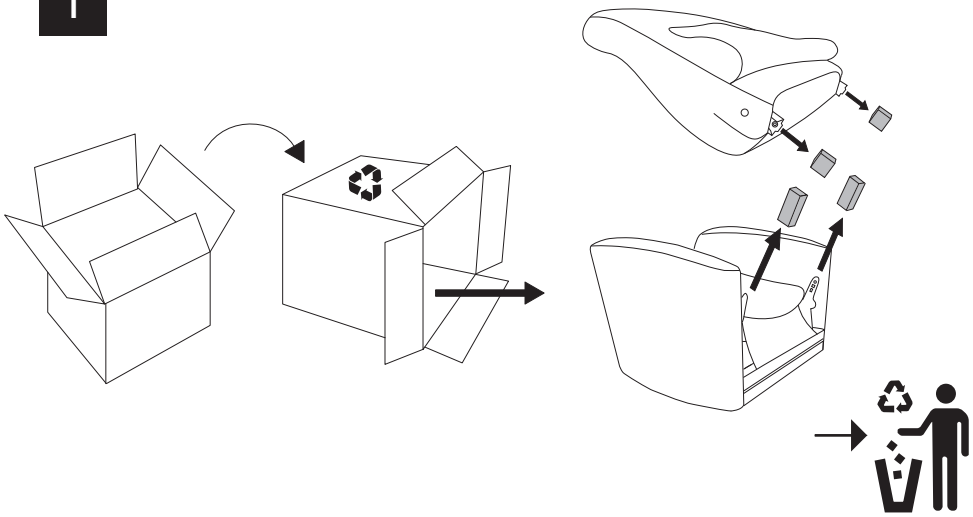

2

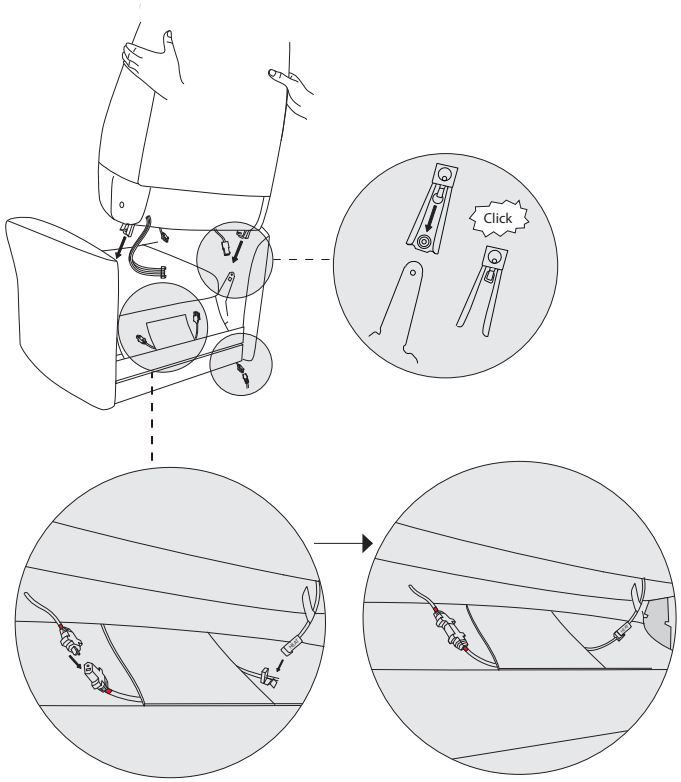

3

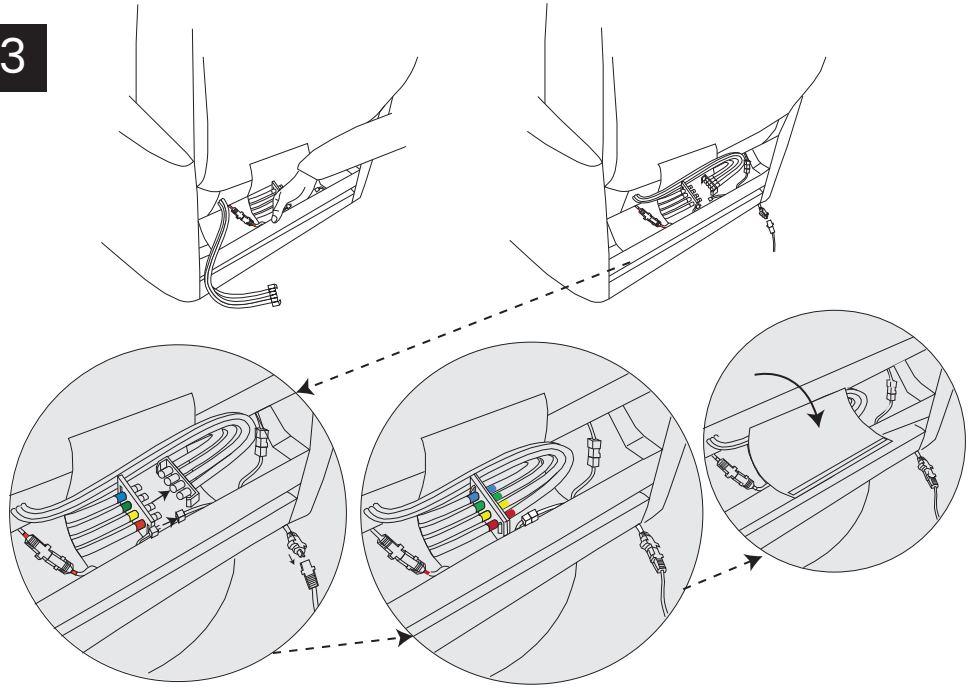

4

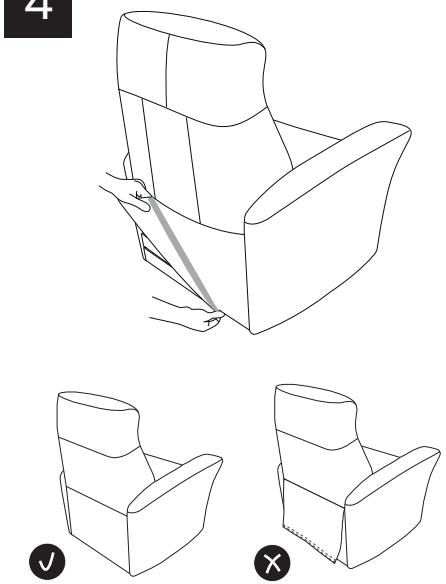

5

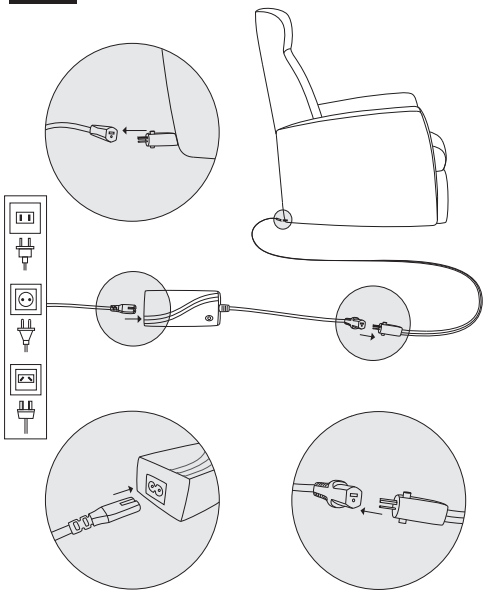

A219 Zero Gravity Power Extra (ZX)_H2_12.05.25

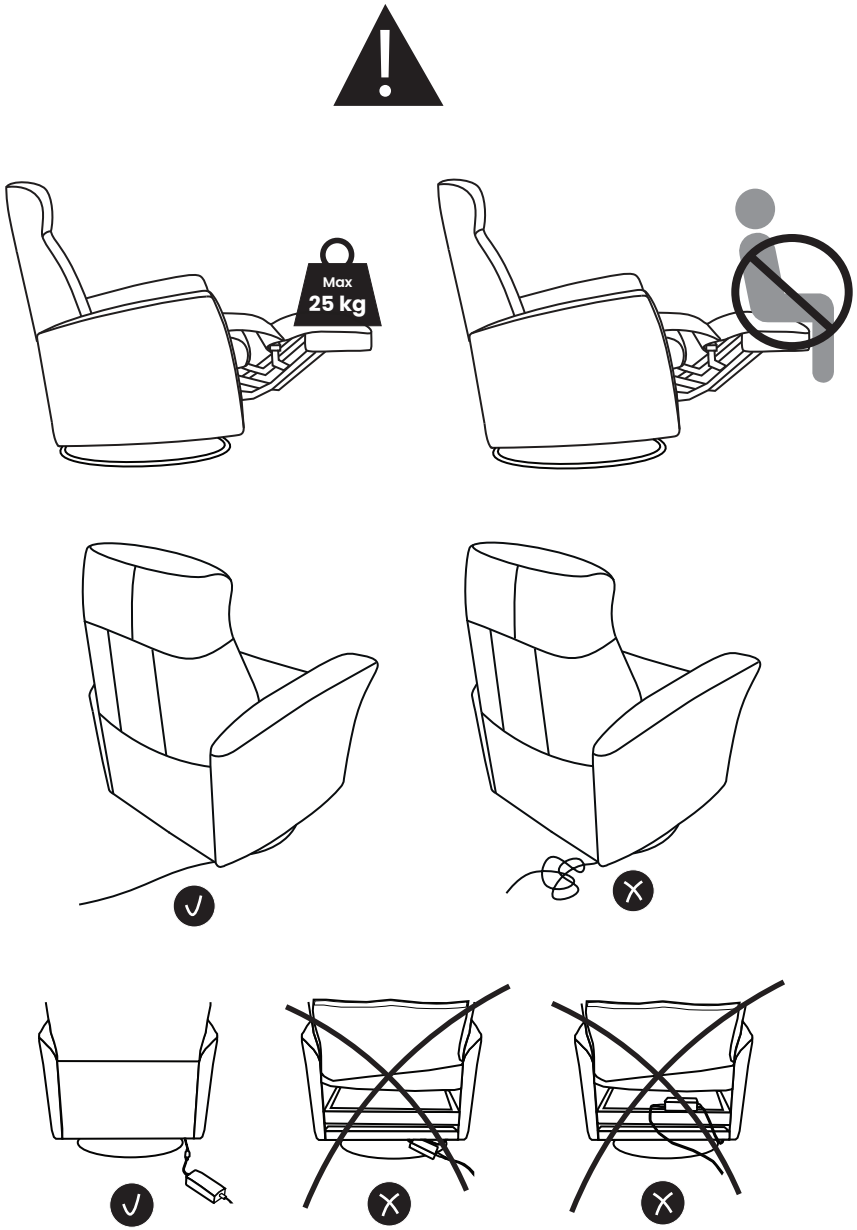

Please visit h2seating.com
or scan QR code for more information

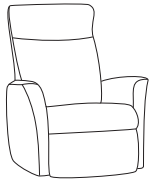

Zero Gravity
PowerEXTRA (ZX)

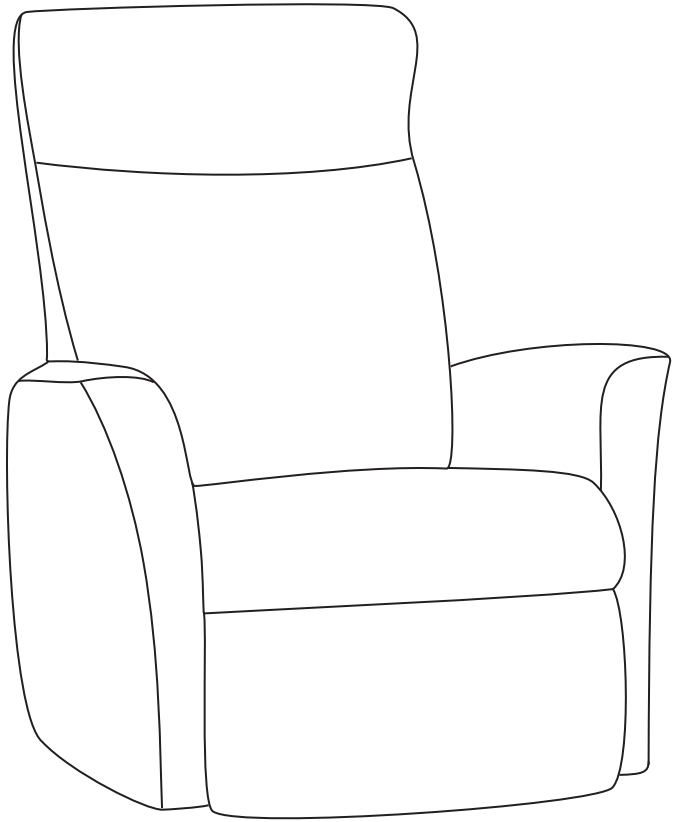

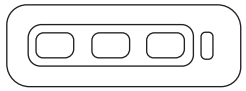

1

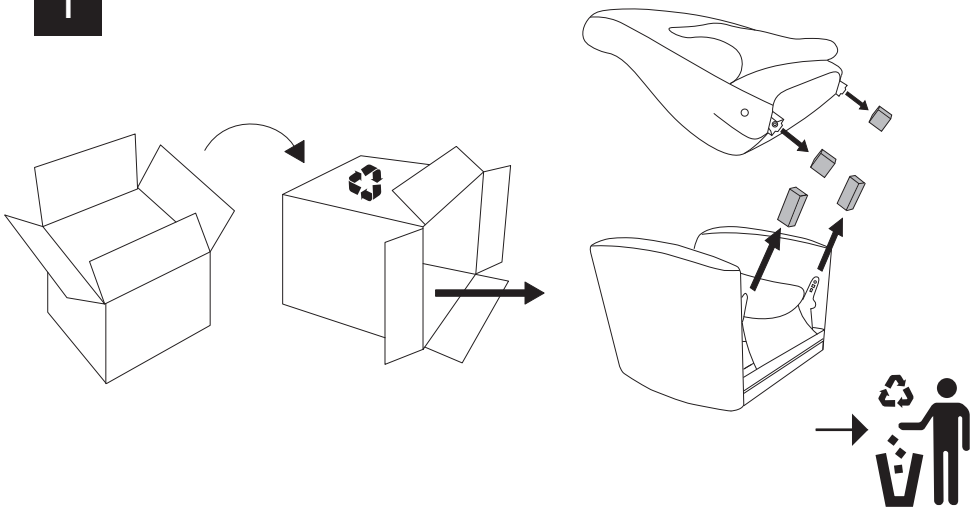

2

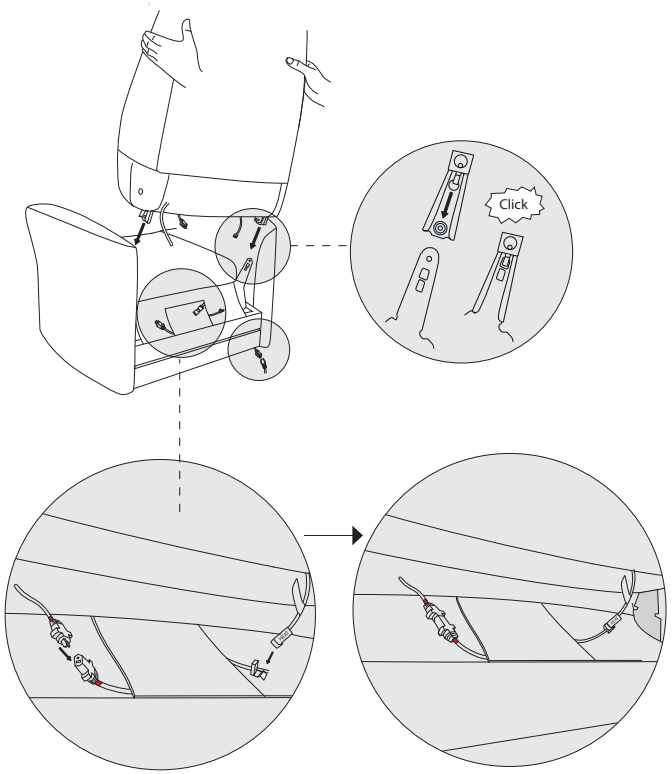

3

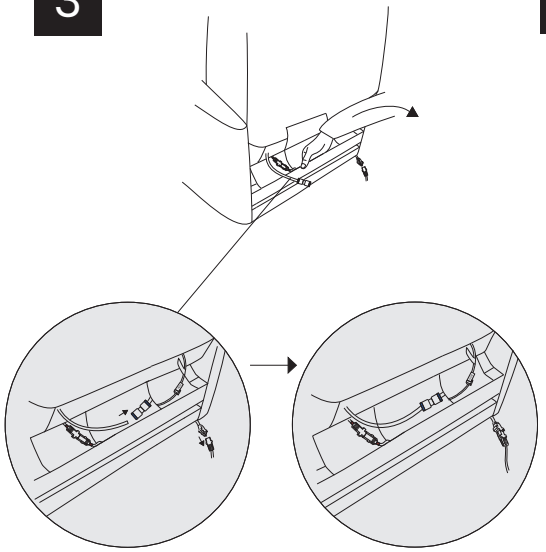

4

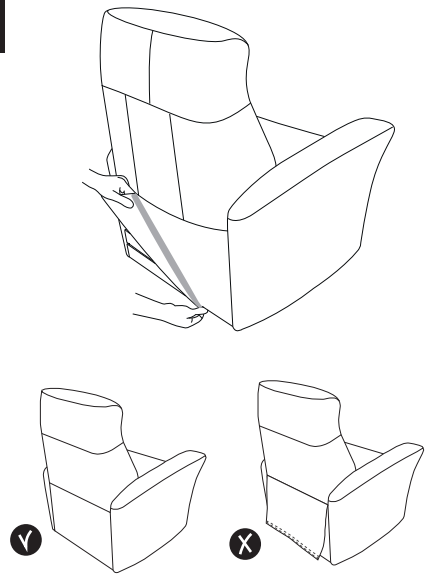

5

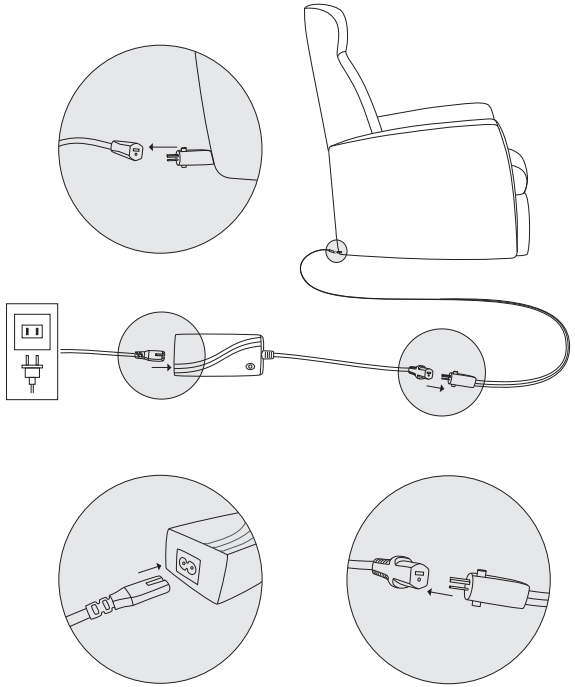

A220 Nordic Relax Zero Gravity (ZS) w H2 Logo_12.05.25

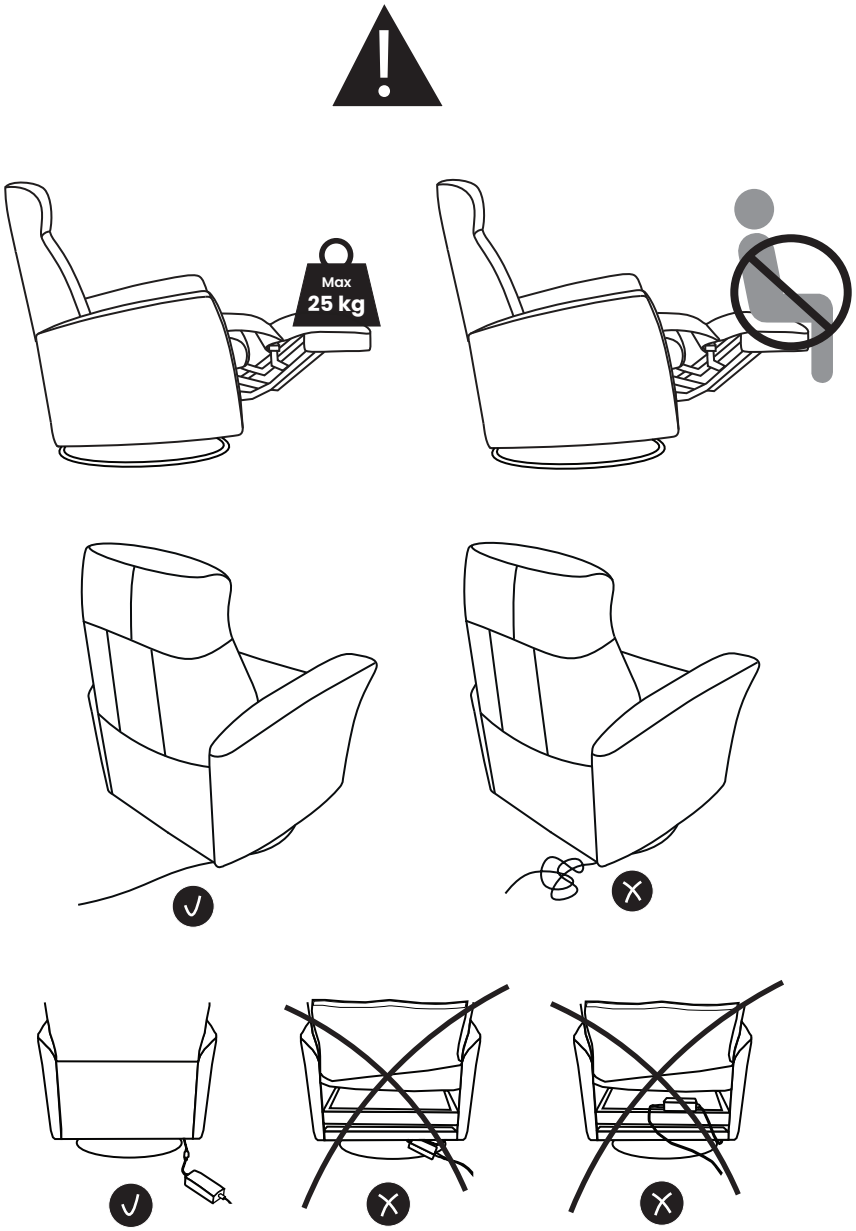

Please visit h2seating.com
or scan QR code for more information

Nordic Relax
Zero Gravity (ZS)

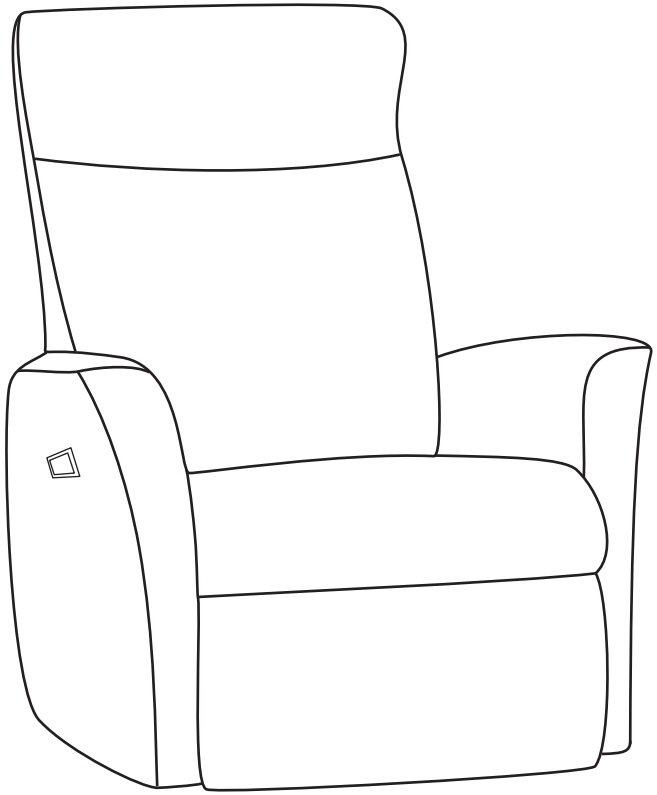

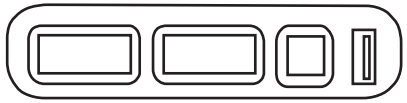

Zero Gravity ZS USB

1

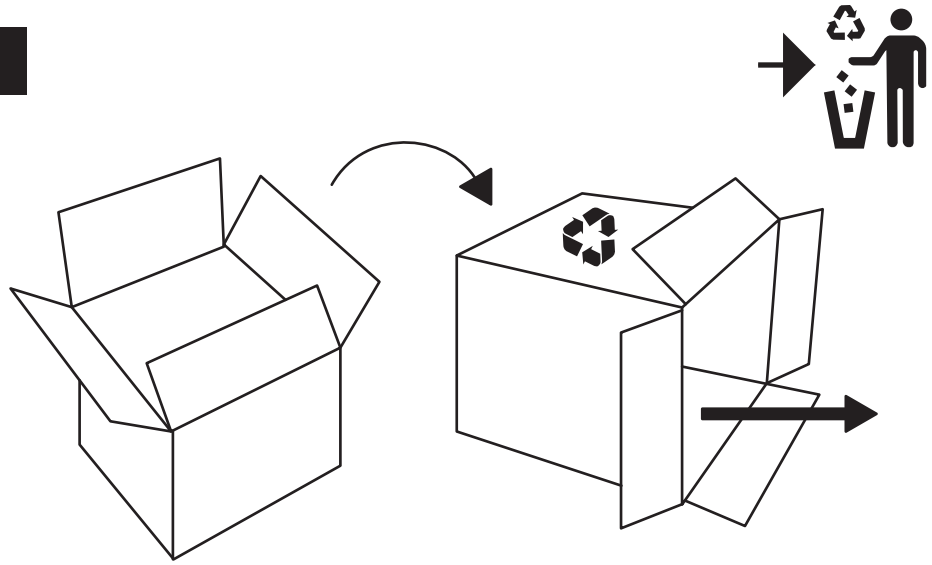

2

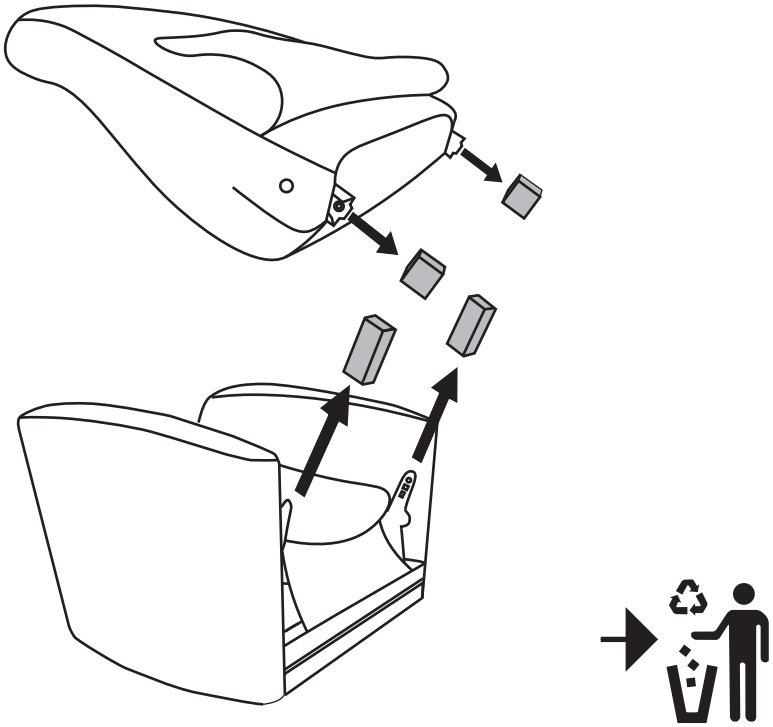

3

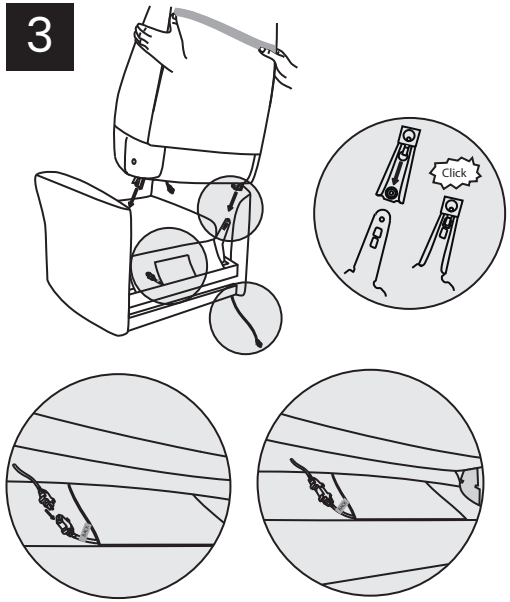

4

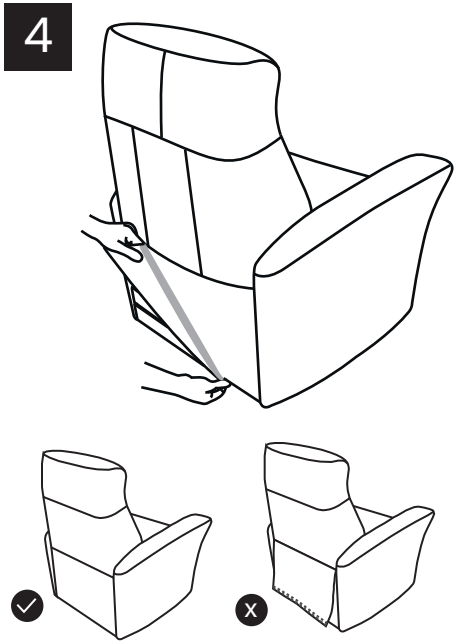
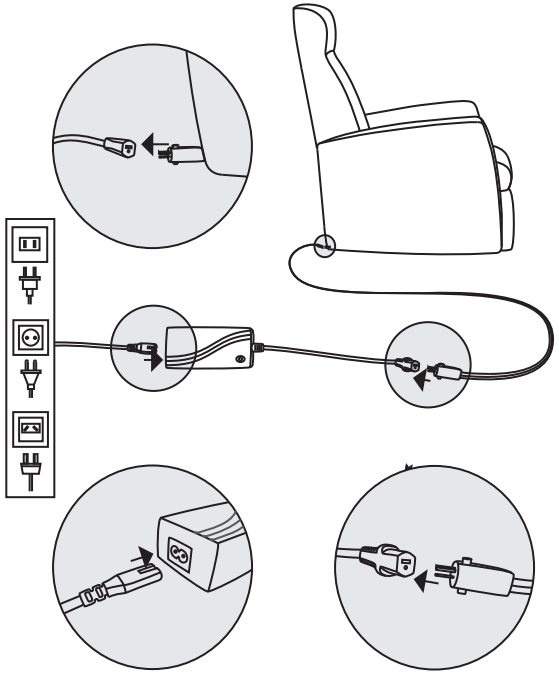
5