A103 Assembly Nordic Relax (GM) w H2 Logo_120324

Nordic Relax (GM)

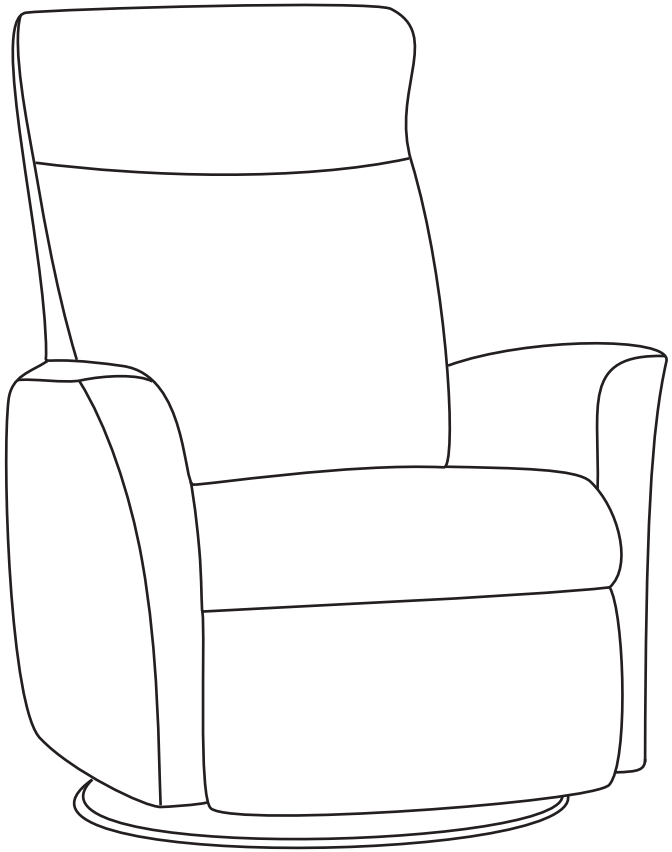

Please visit h2seating.com
or scan QR code for more information

1

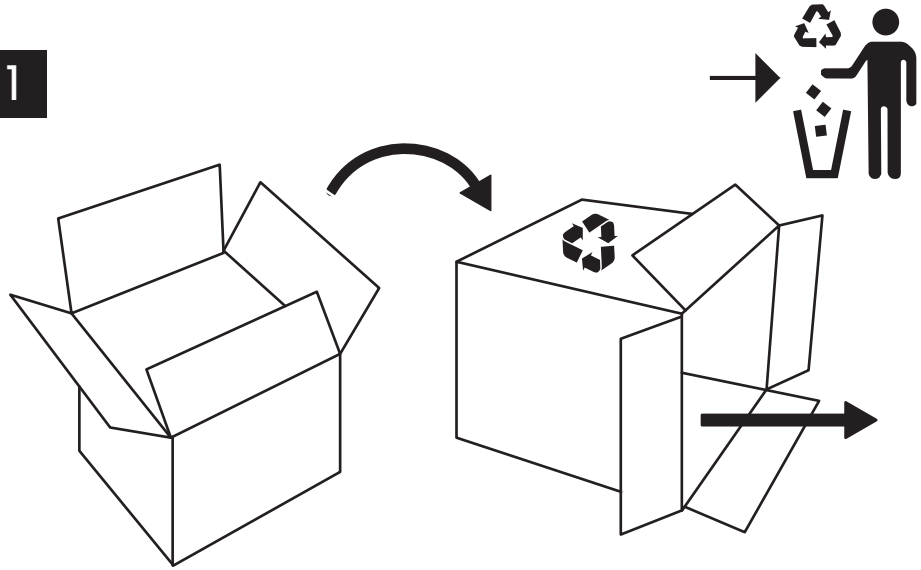

2

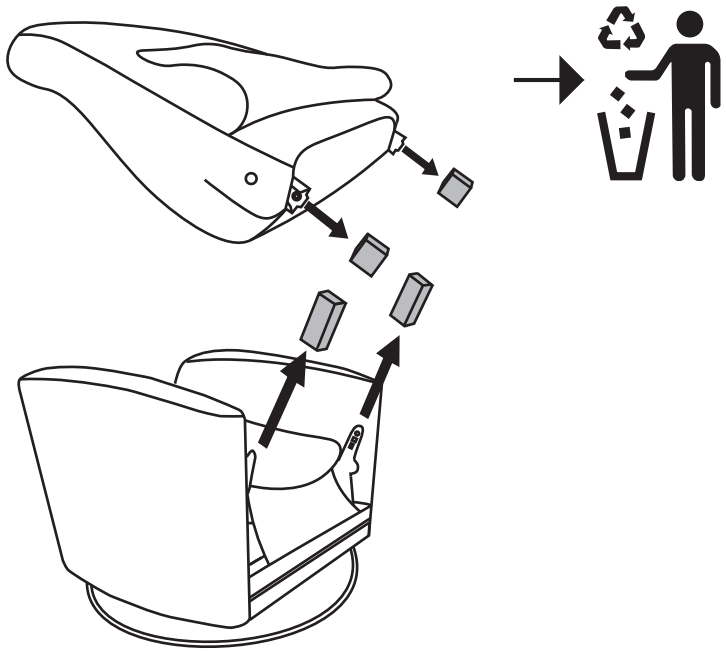

3

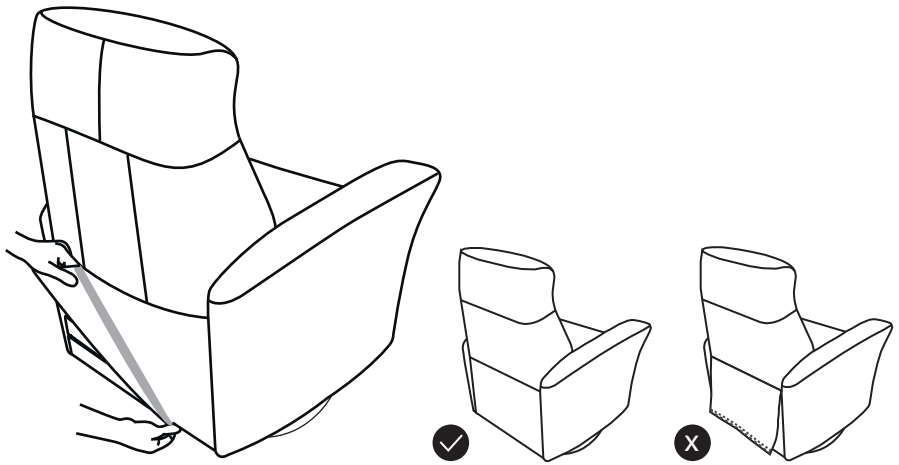

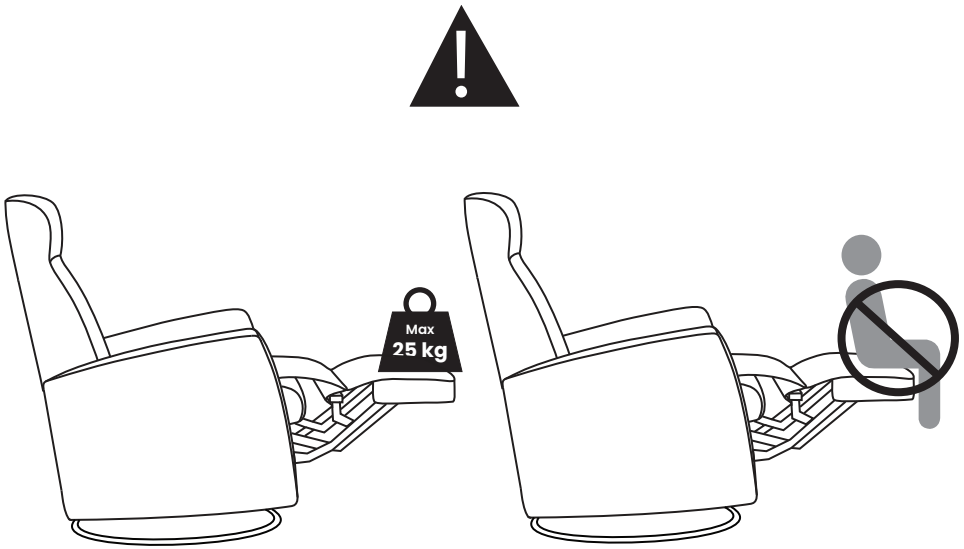

A104 Nordic Relax Power (GP) w H2 Logo_12.05.25

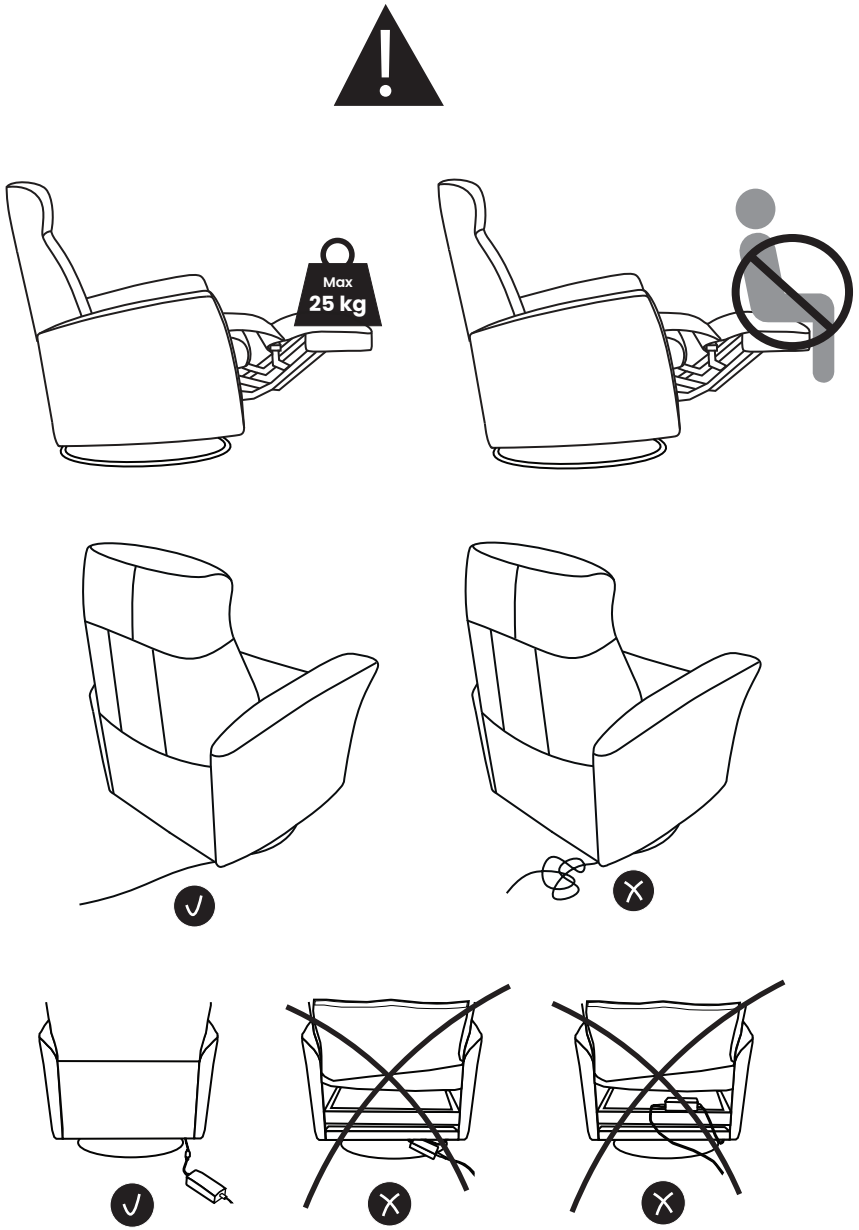

Please visit h2seating.com
or scan QR code for more information

Nordic Relax
POWER (GP)

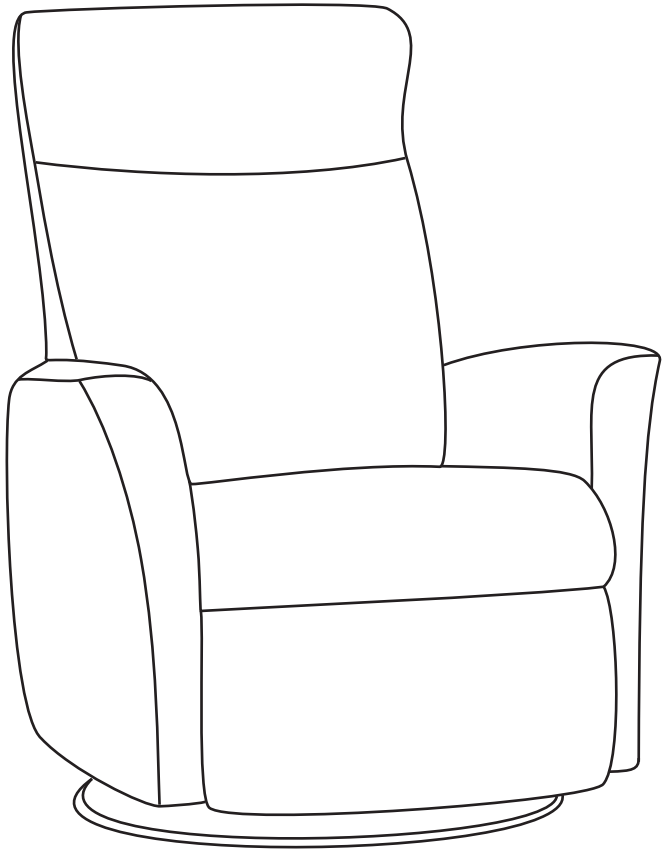

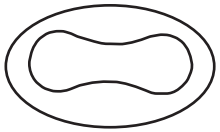

Power

1

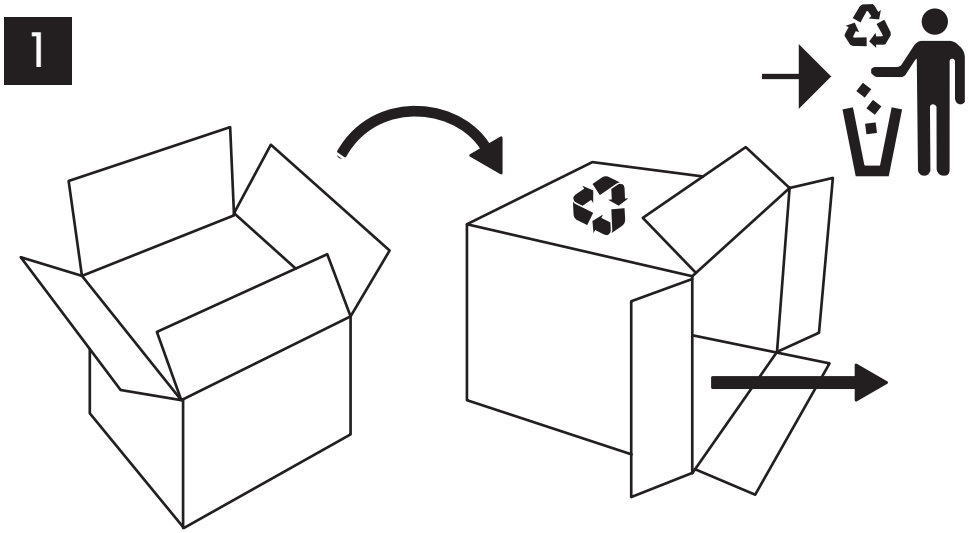

2

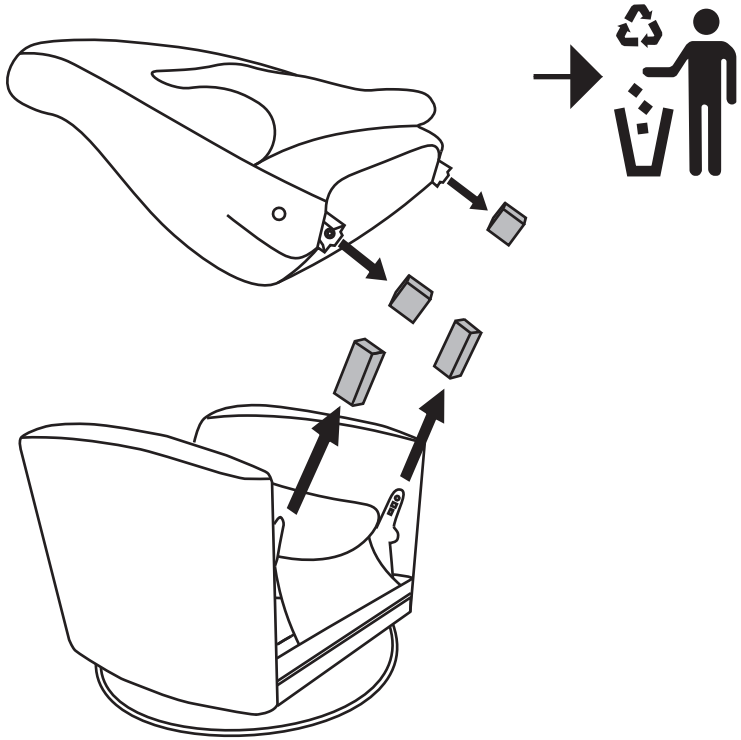

3

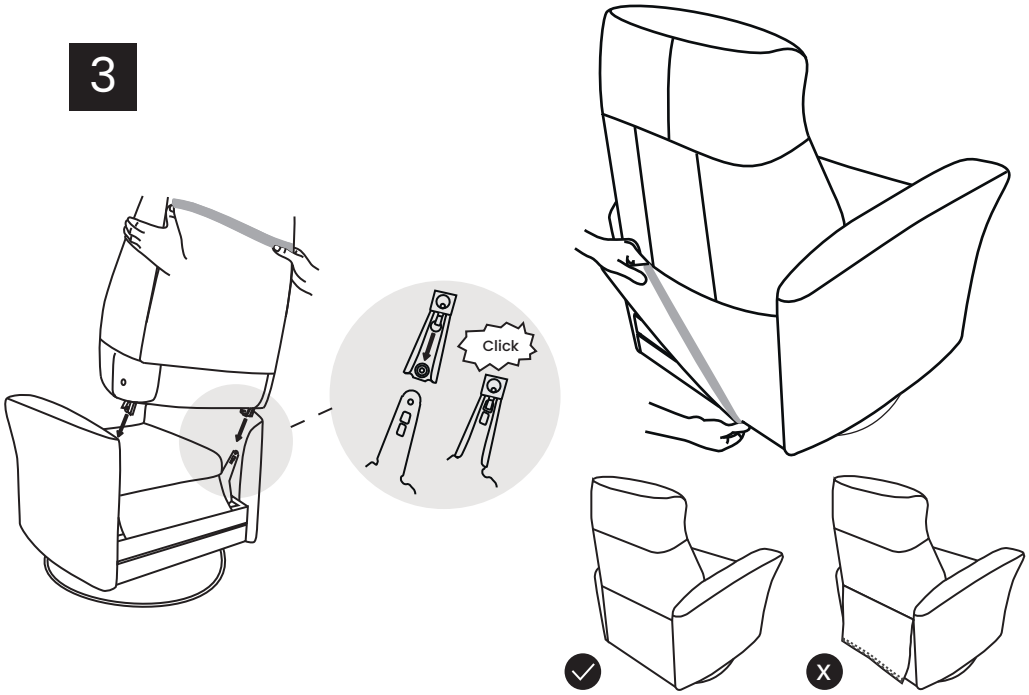

4

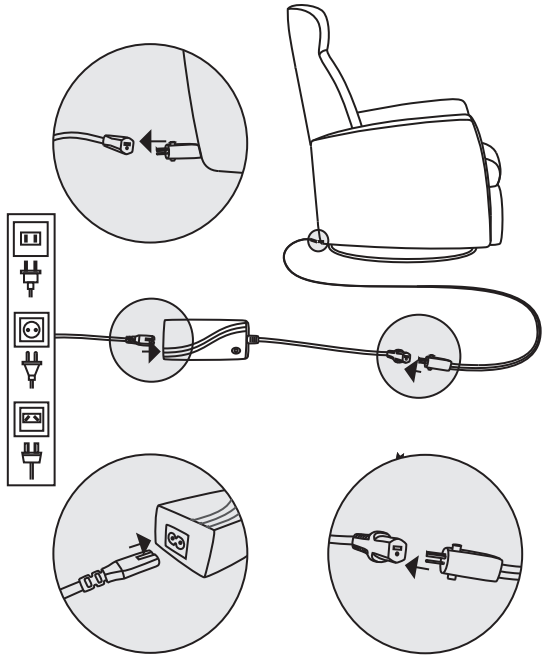

A254 Nordic Relax GP+ w Heating w H2 Logo_ 12.05.25

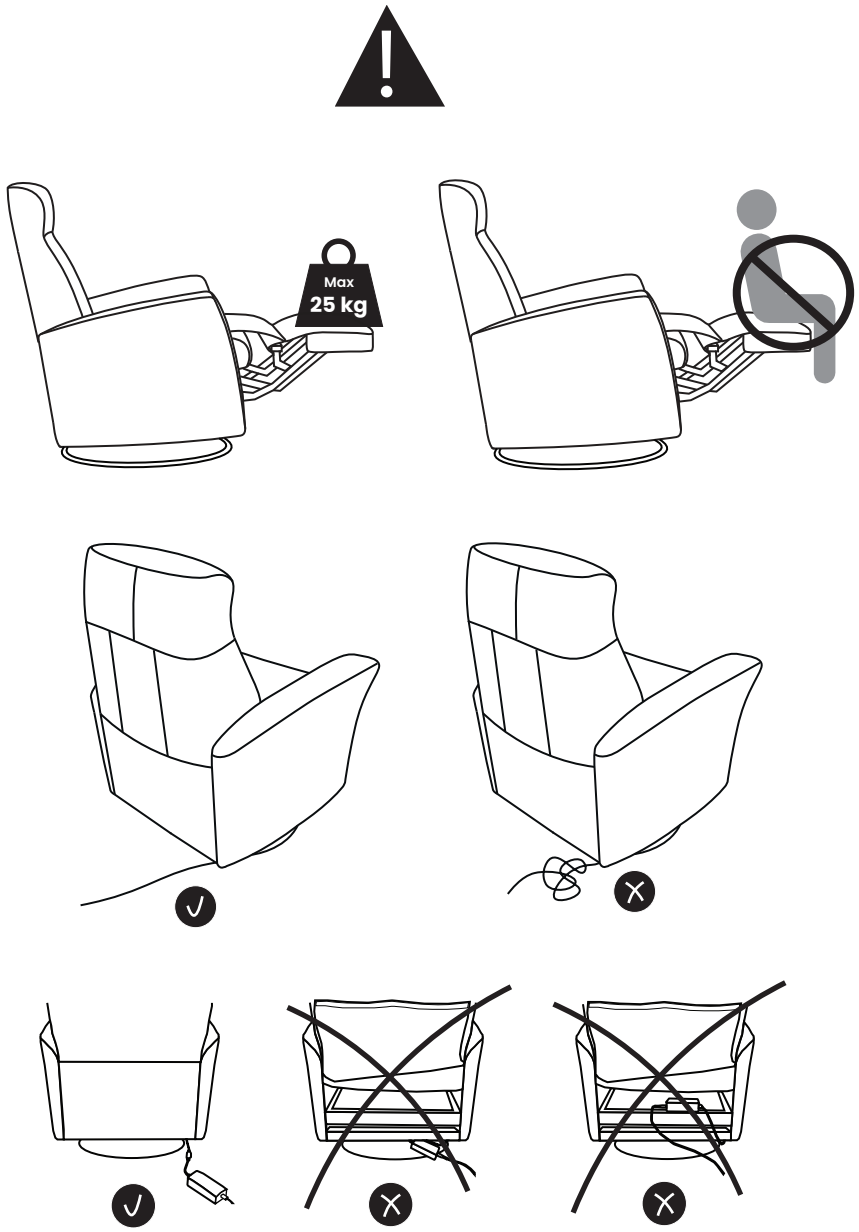

Please visit h2seating.com
or scan QR code for more information

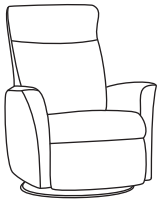

Nordic Relax Power (GP+)

Heating

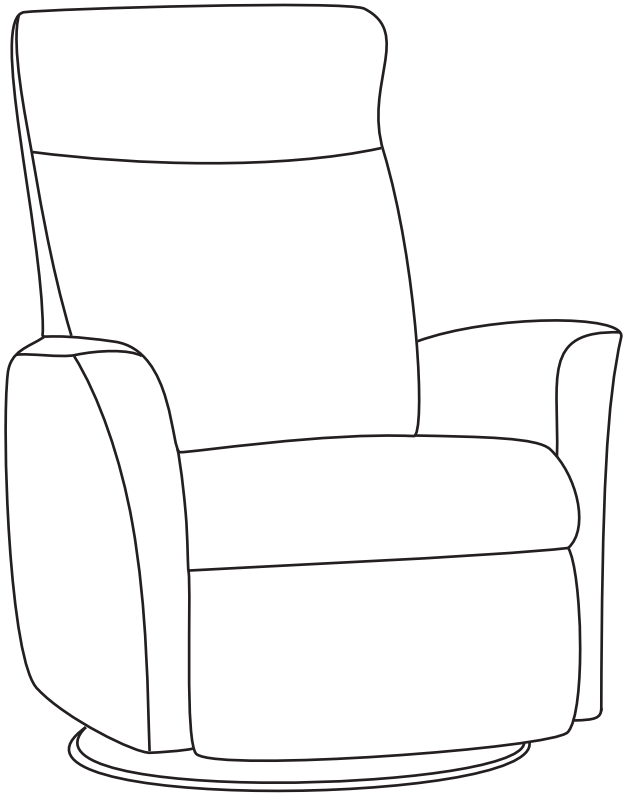

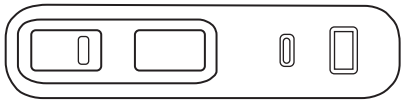

Power PLUS
with Heating

1

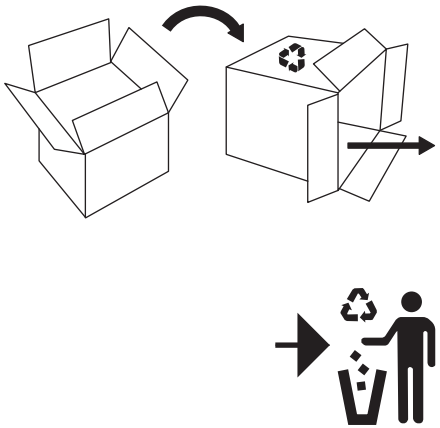

2

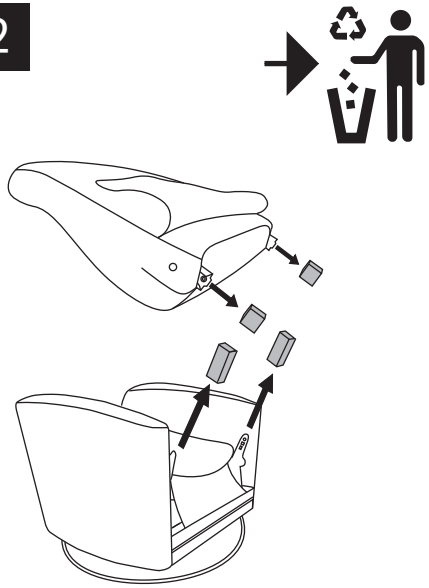

3

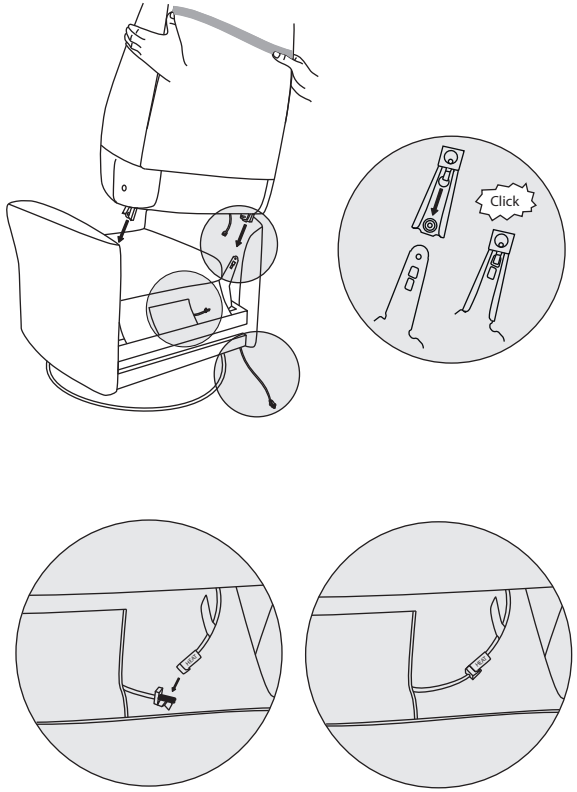

4

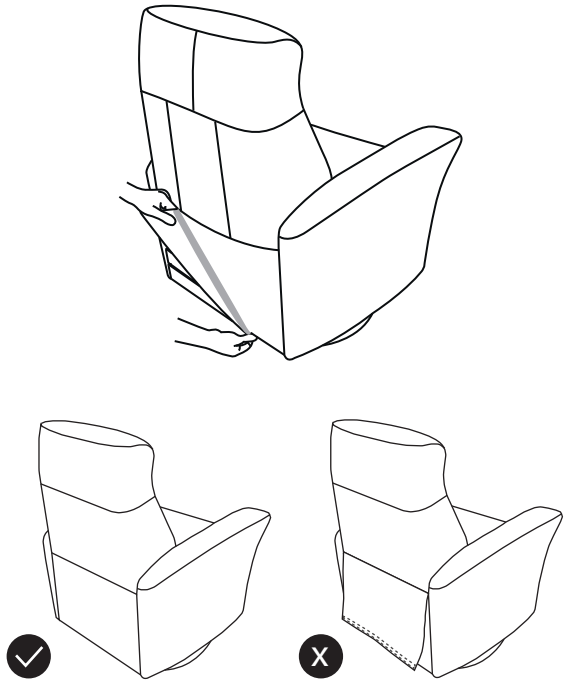

5

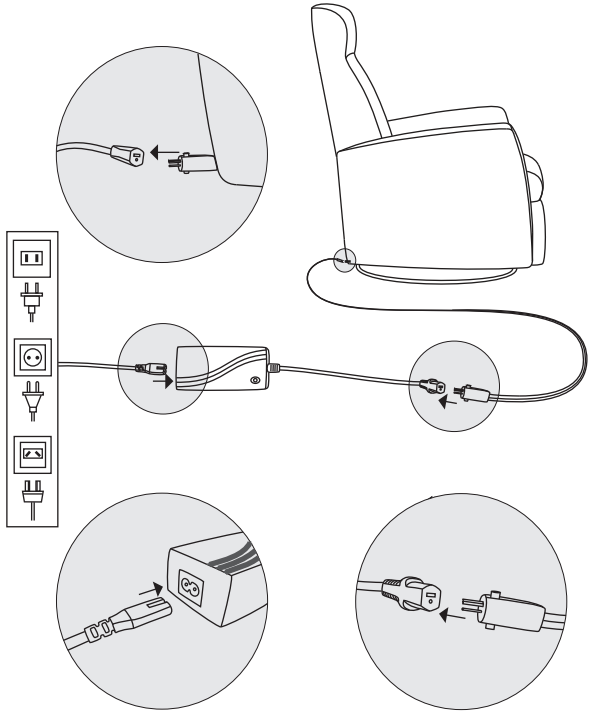

A323 Nordic Relax (GP) Battery Charge_w H2 Logo_12.05.25

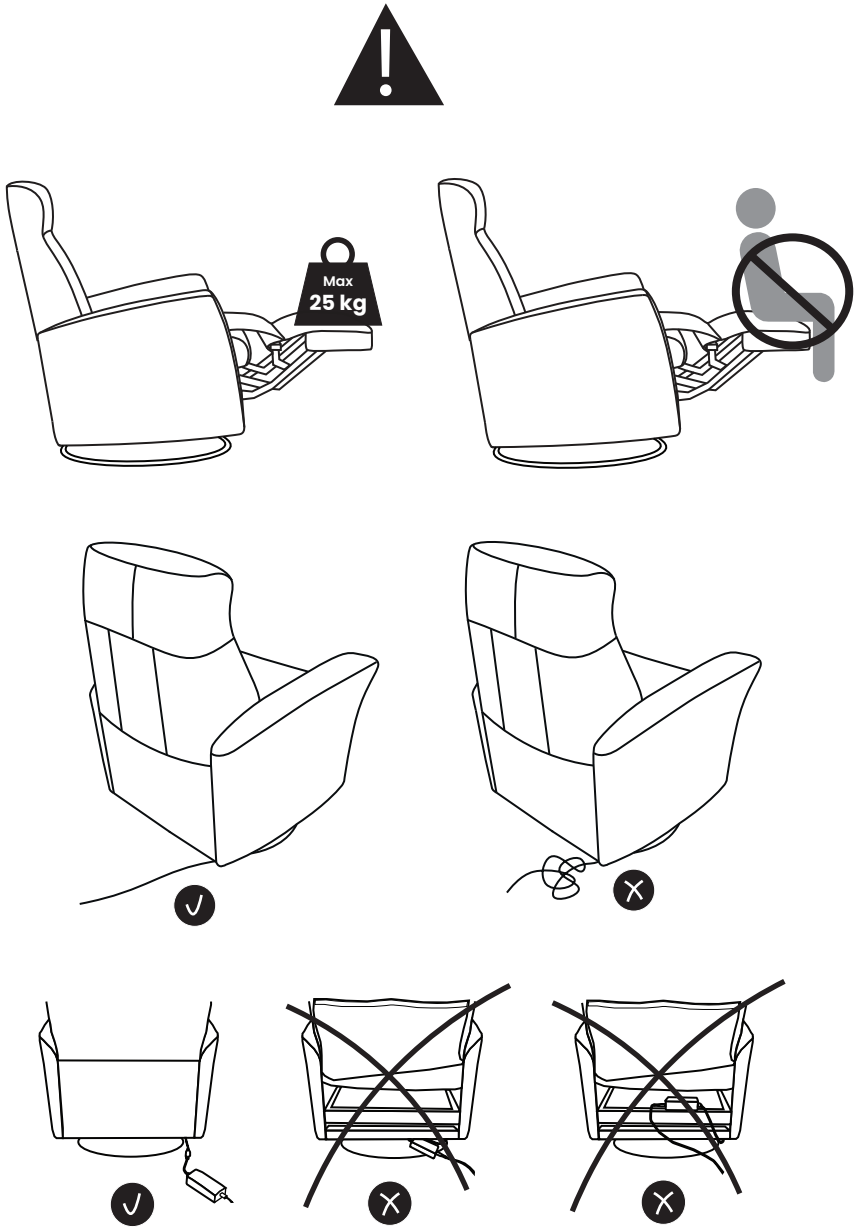

Please visit h2seating.com
or scan QR code for more information

Nordic Relax
POWER (GP)
Battery Charge

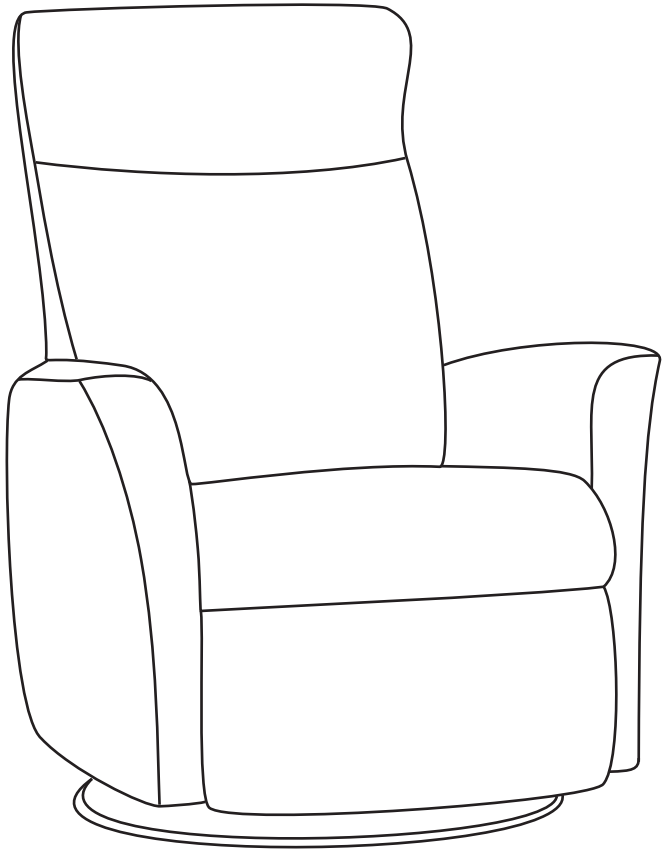

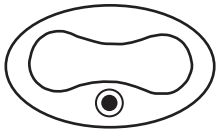

Power
Battery Charge

1

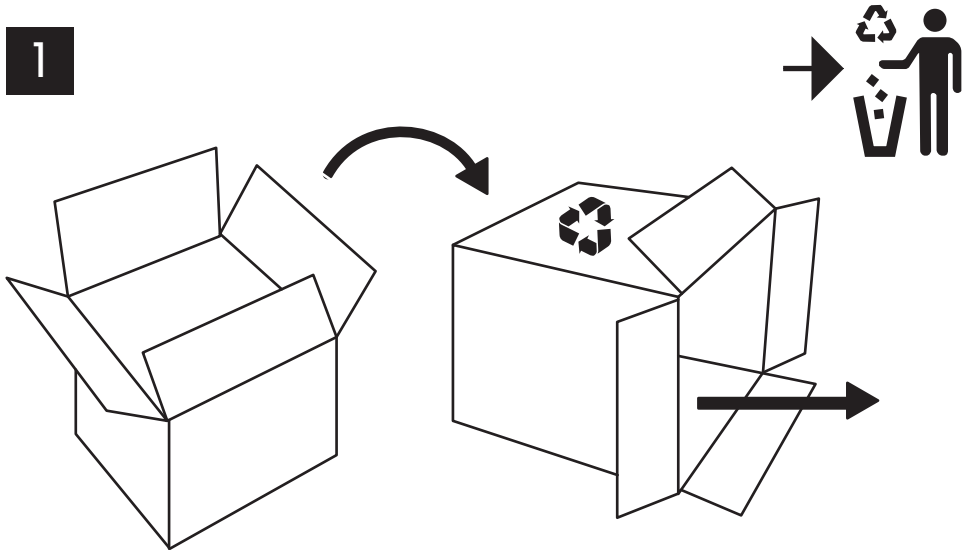

2

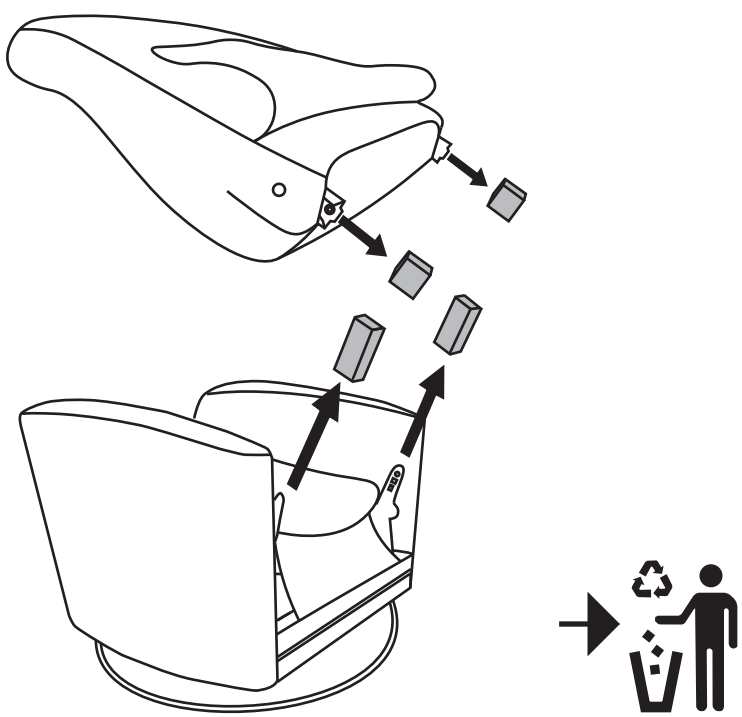

3

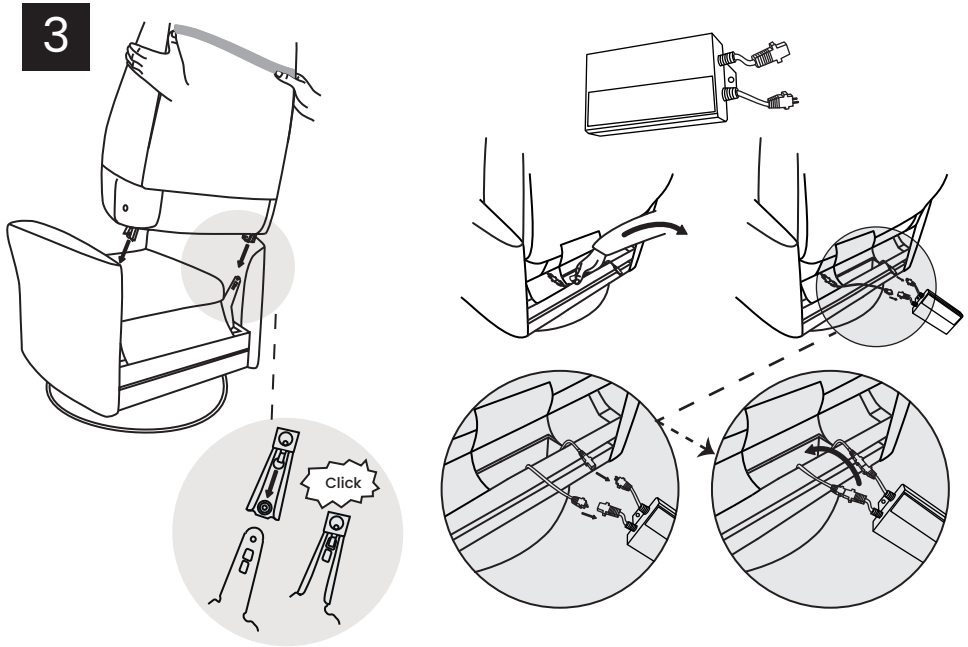

4

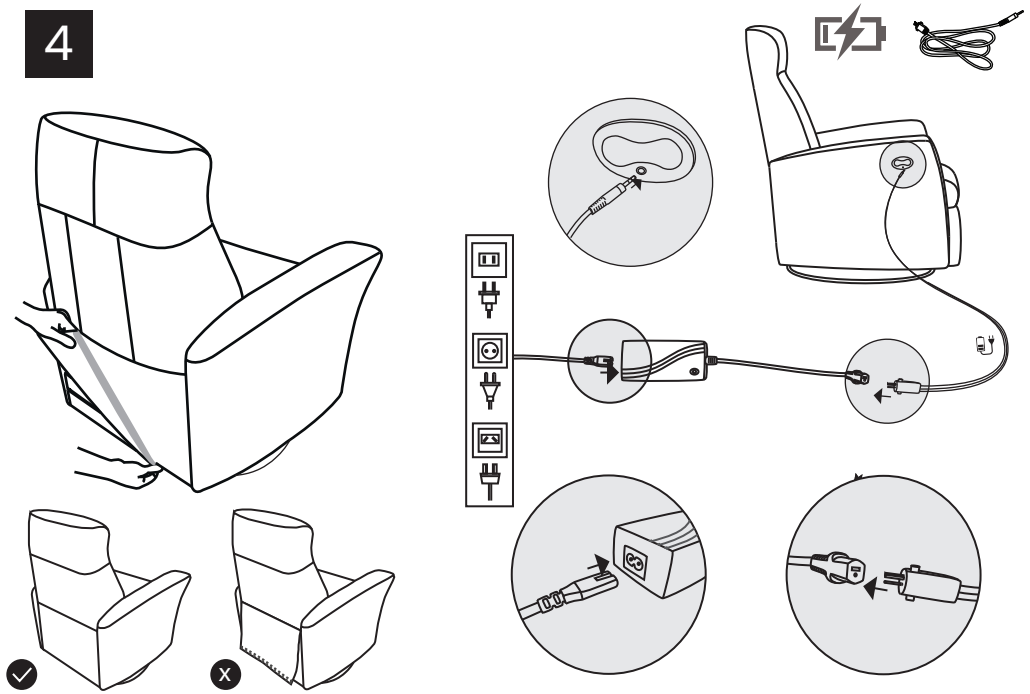

A126 Nordic Relax PowerPLUS USB (GS) w H2 Logo _12.05.25

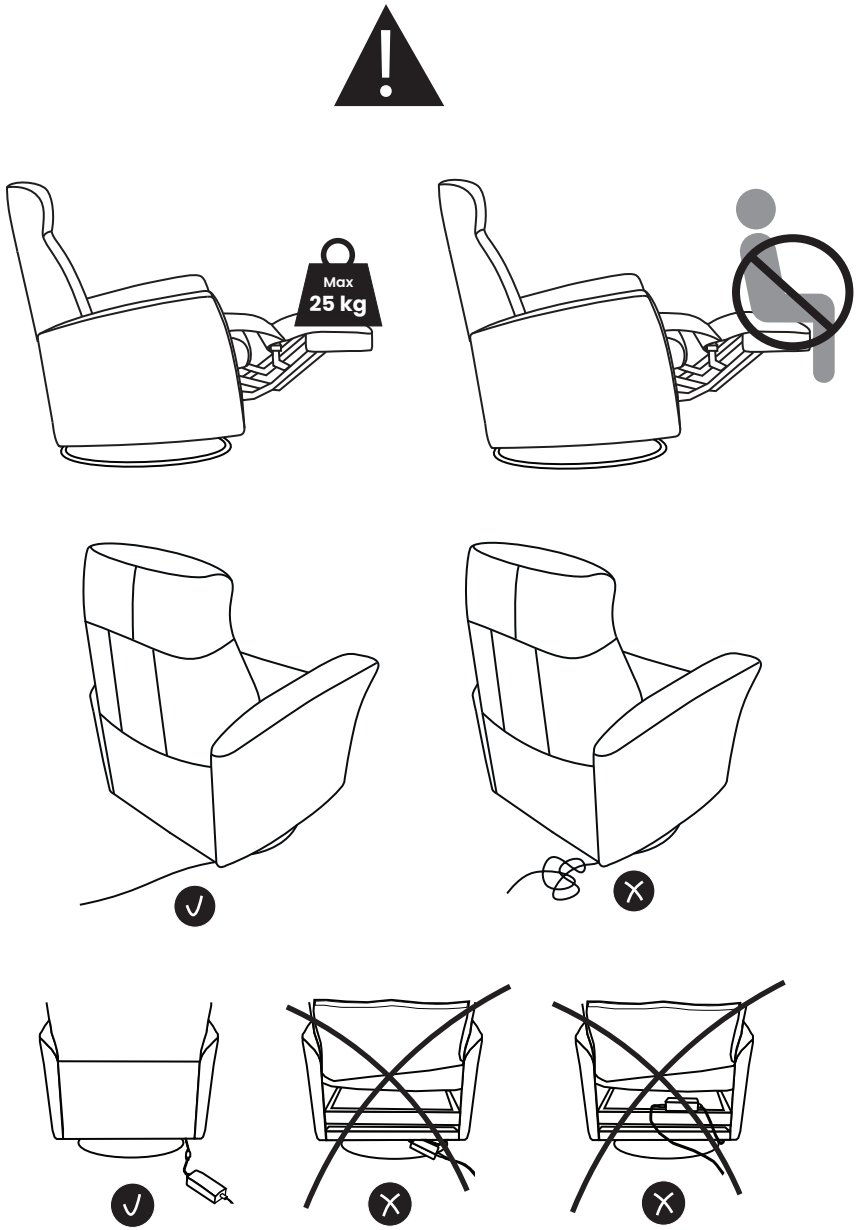

Please visit h2seating.com
or scan QR code for more information

Nordic Relax
PowerPLUS USB (GS)

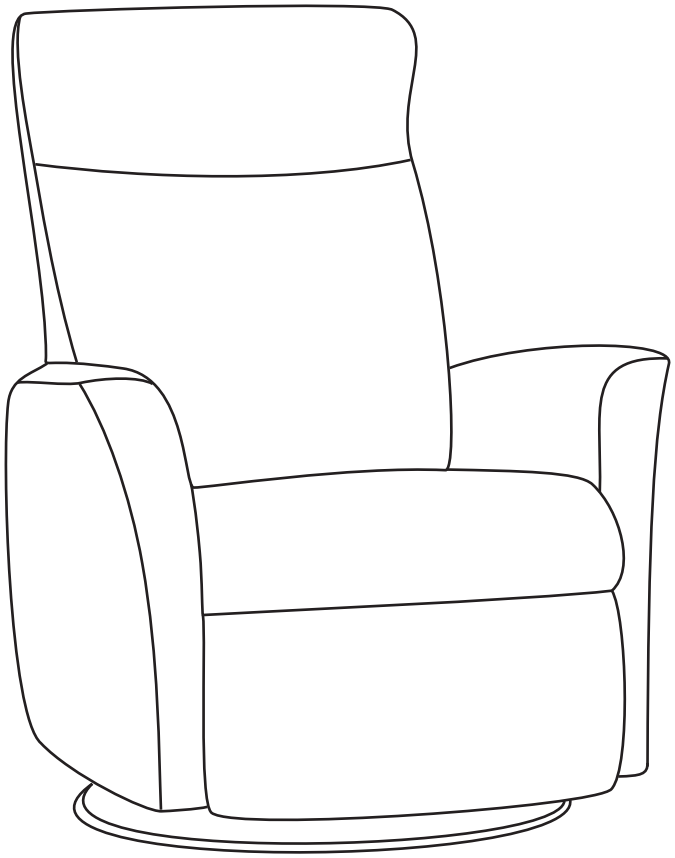

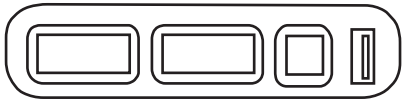

PowerPLUS USB

1

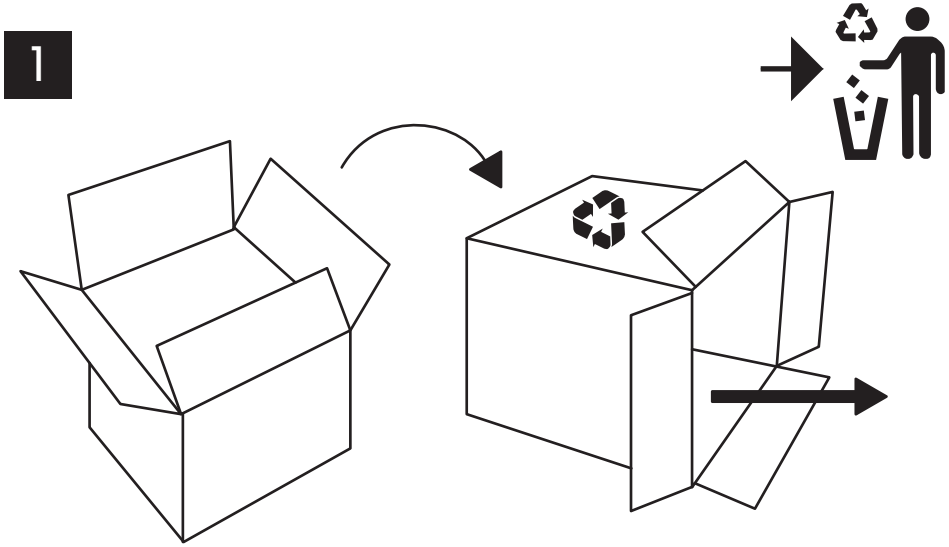

2

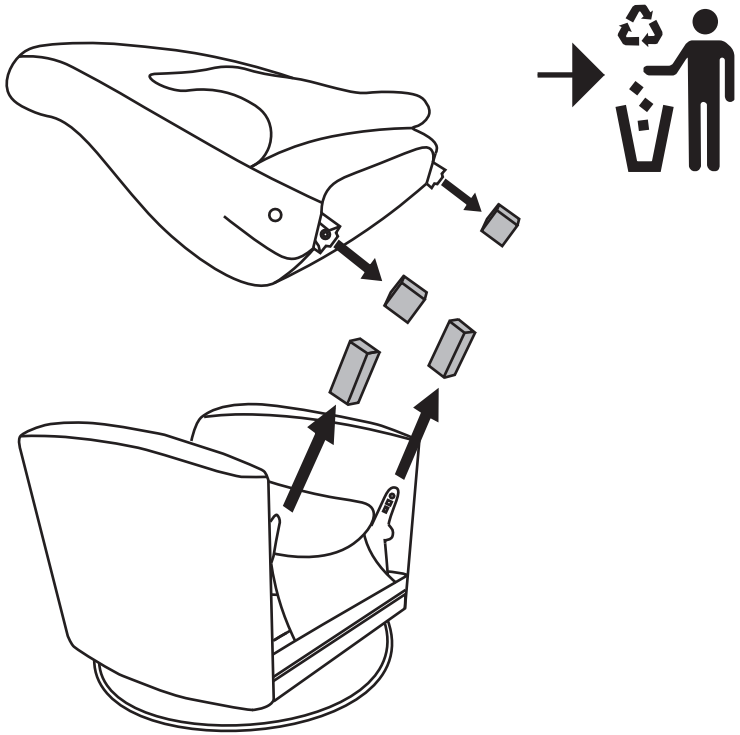

3

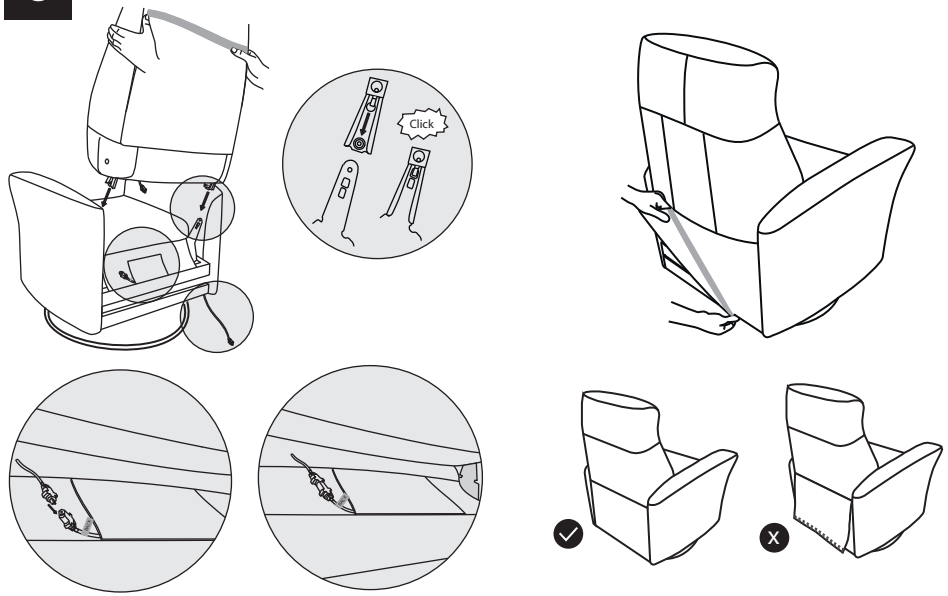

4

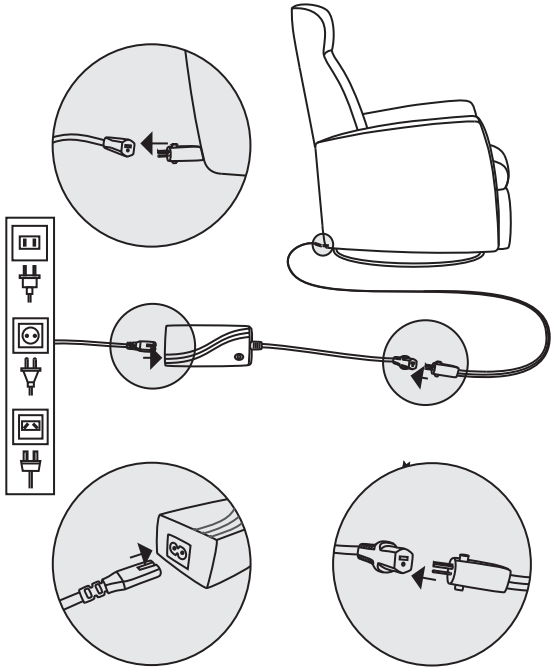

A134 Nordic Relax PowerPLUS Battery Charge_12.05.25

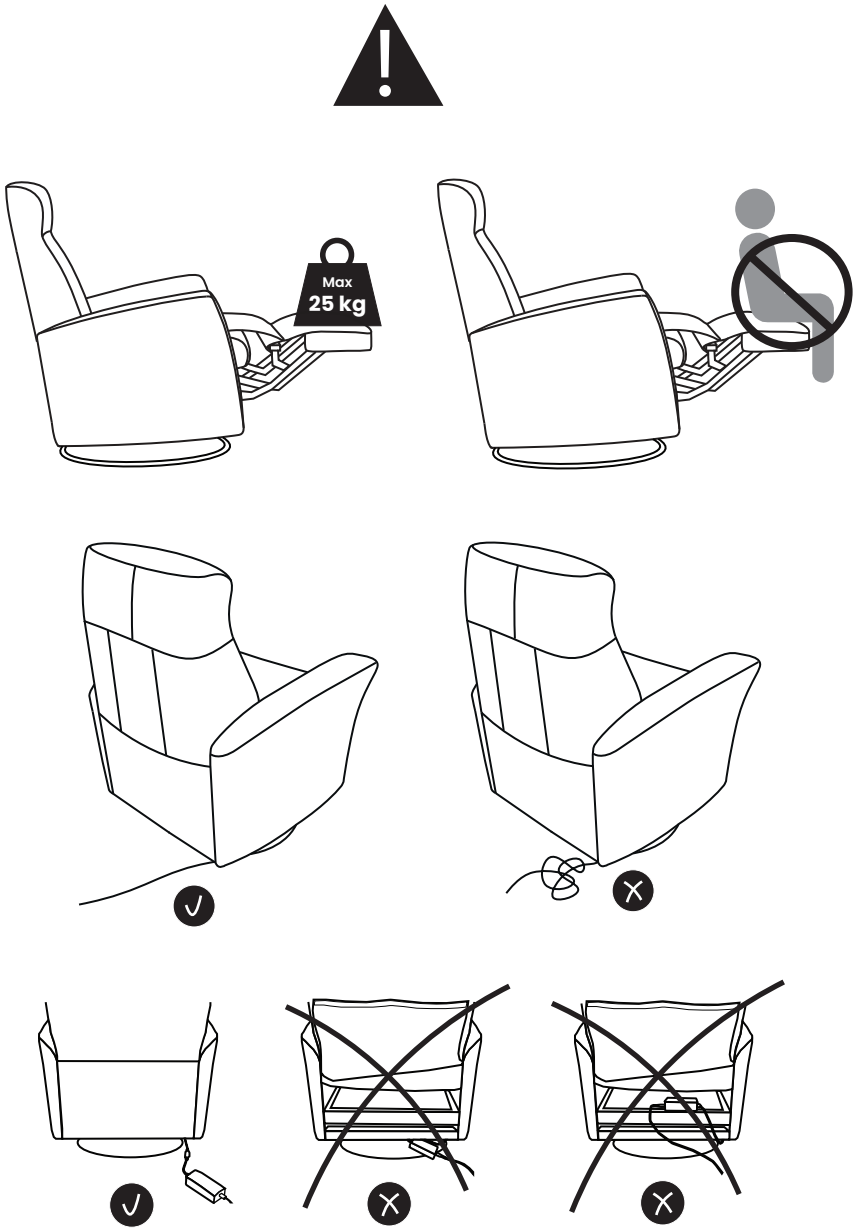

Please visit h2seating.com
or scan QR code for more information

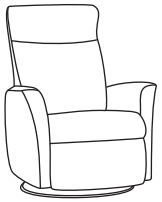

Nordic Relax PowerPLUS
Battery Charge

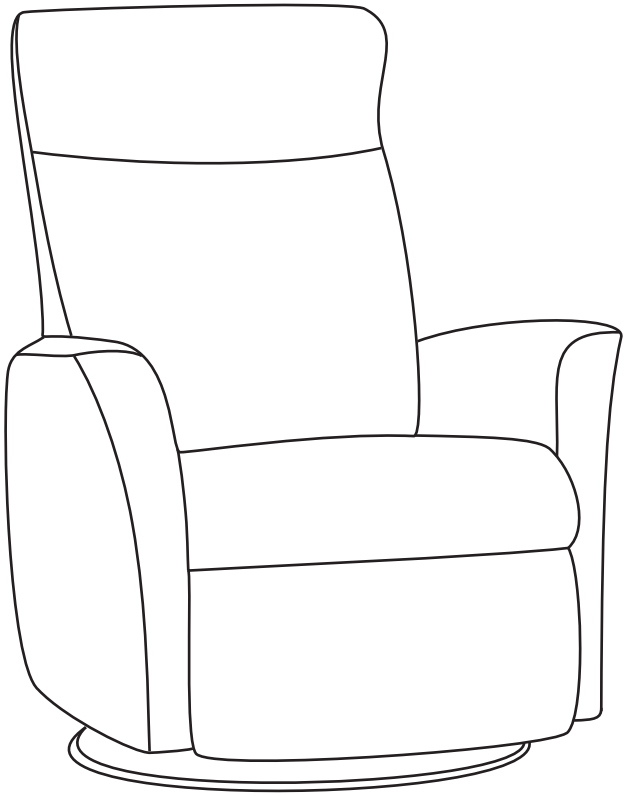

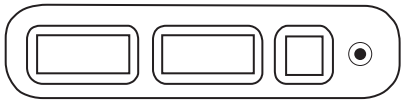

Power PLUS
Battery Charge

1

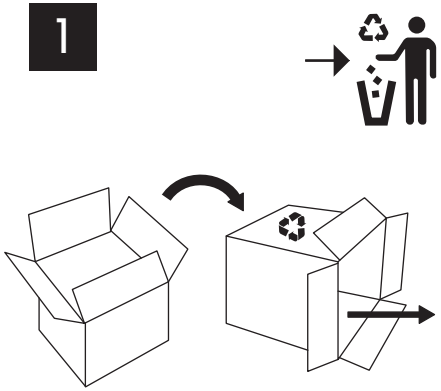

2

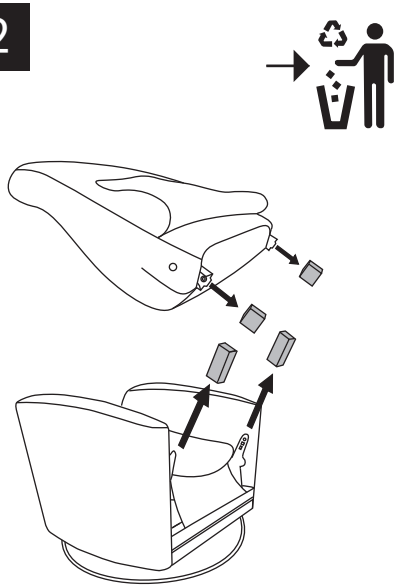

3

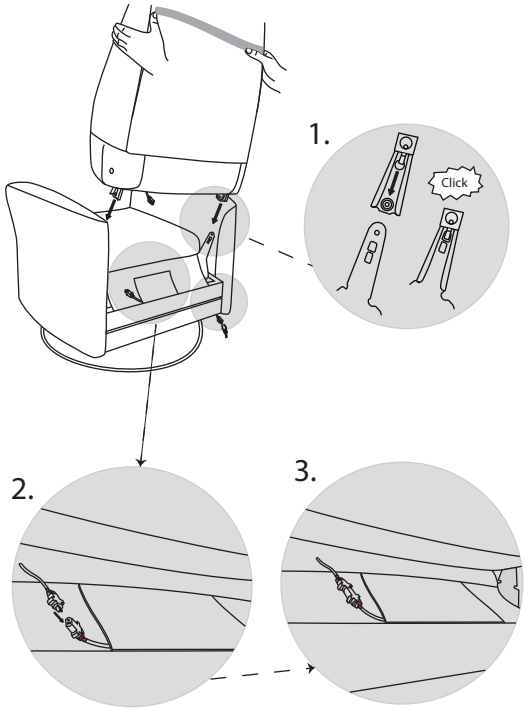

4

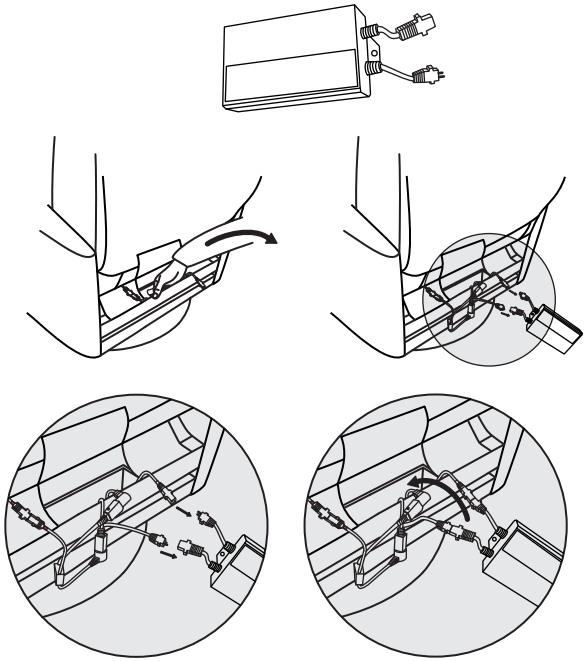

5

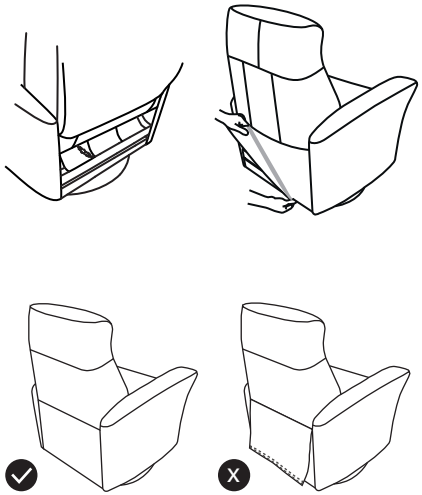

6

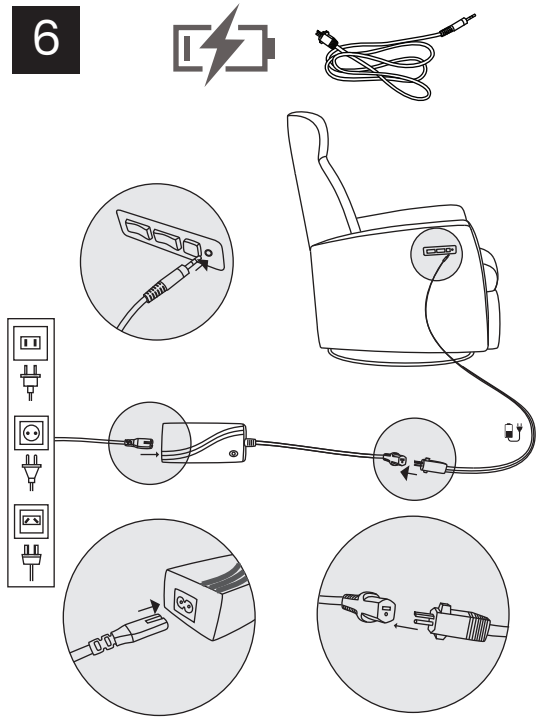

A364 Nordic Relax PowerPLUS+(GS+) w H2 Logo_12.05.25

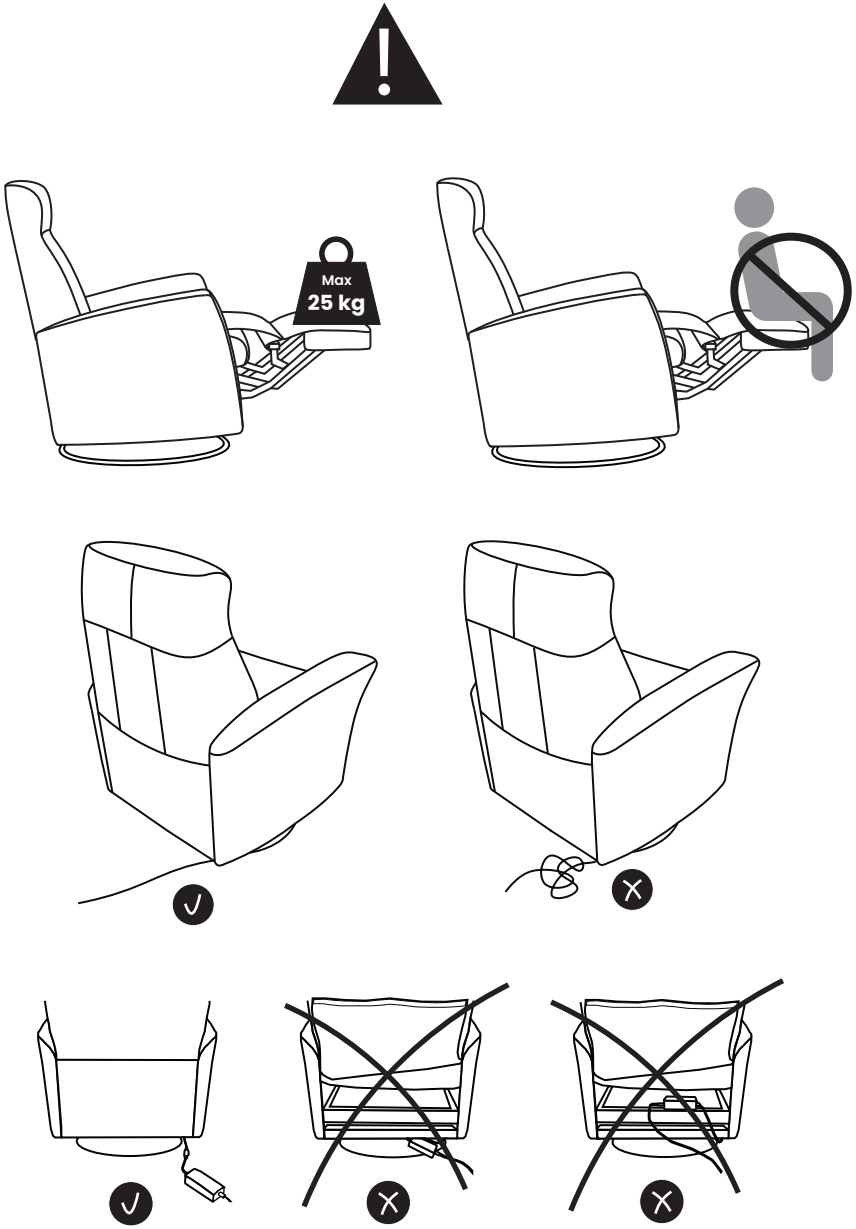

Please visit h2seating.com
or scan QR code for more information

Nordic Relax
PowerPLUS+ (GS+)

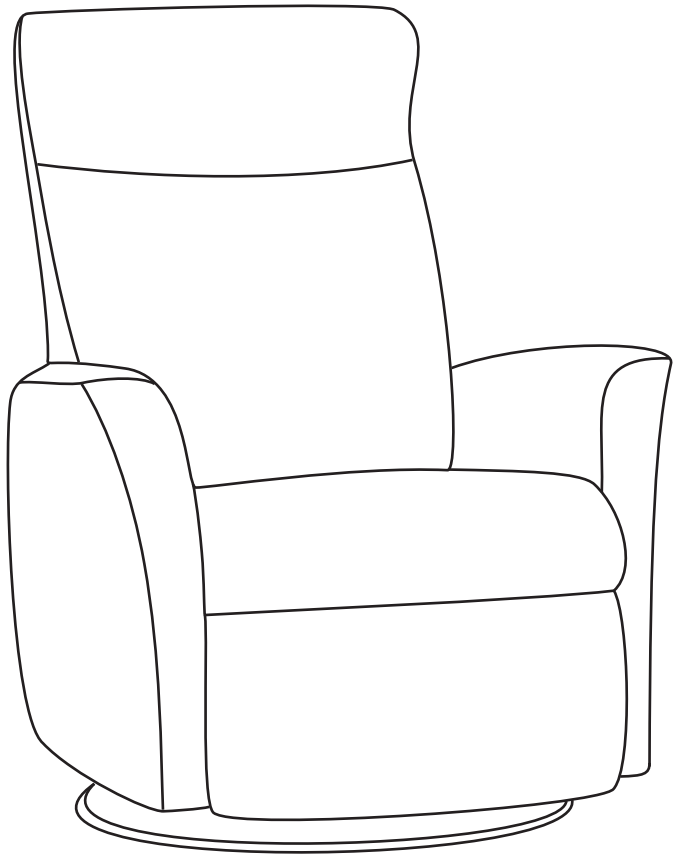

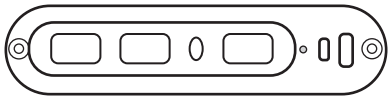

PowerPLUS+
USB-A & USB-C

1

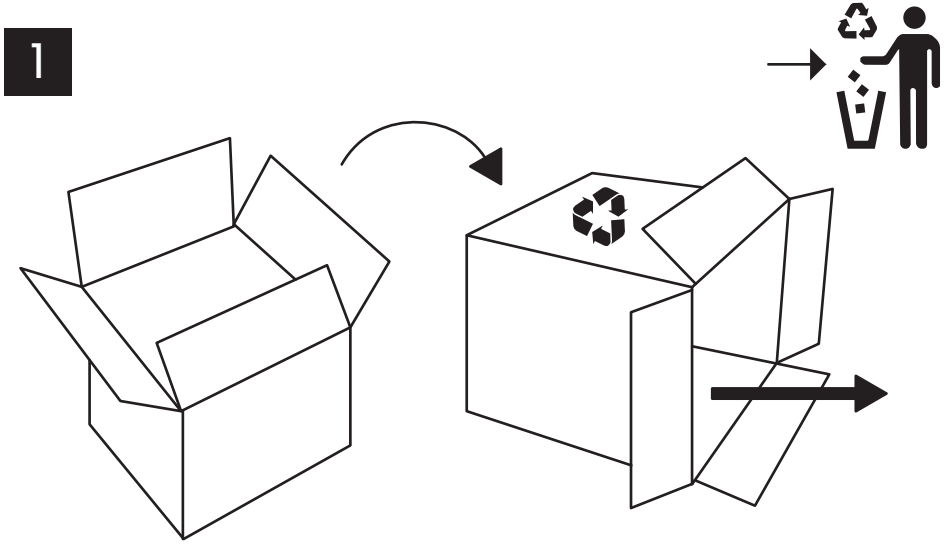

2

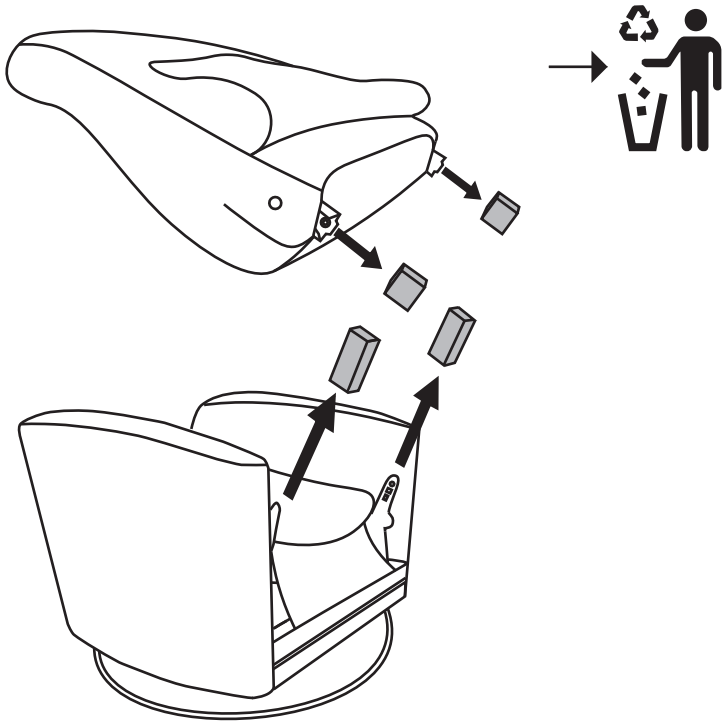

3

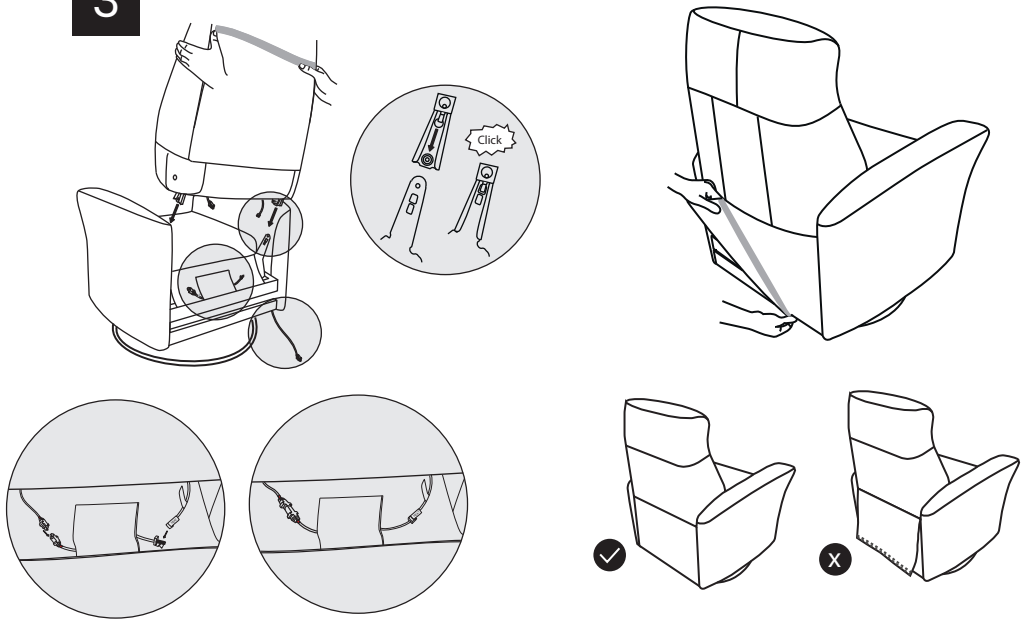

4

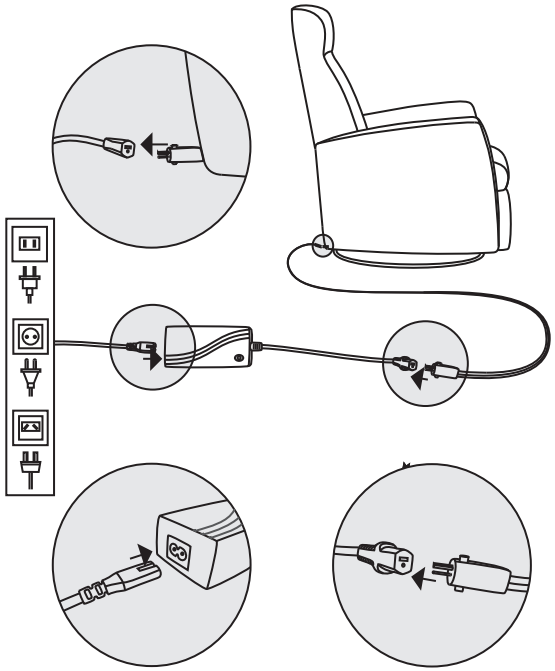

A309 Nordic Relax Glider Power EXTRA w heating (GX) w H2 Logo_12.05.25

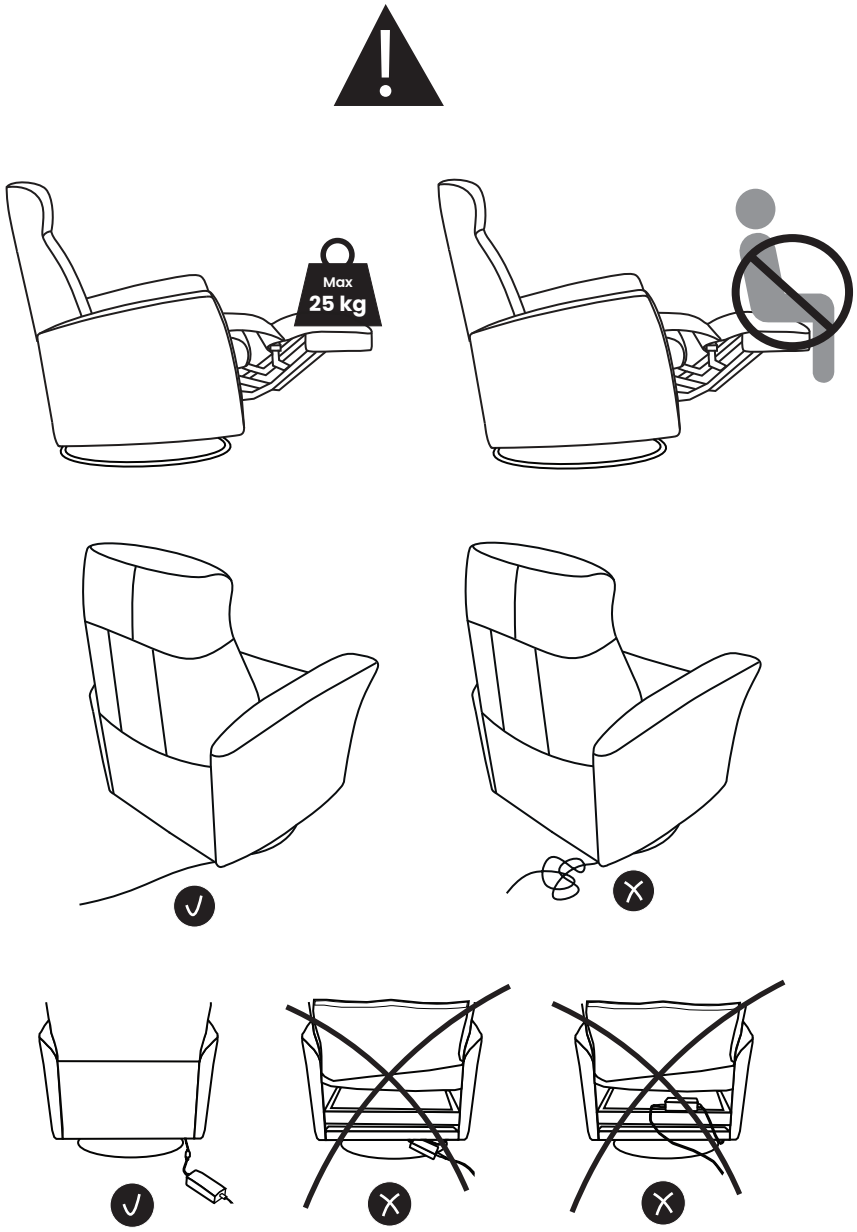

Please visit h2seating.com
or scan QR code for more information

Nordic Relax PowerExtra (GX)

w Heating

H2 SEATING

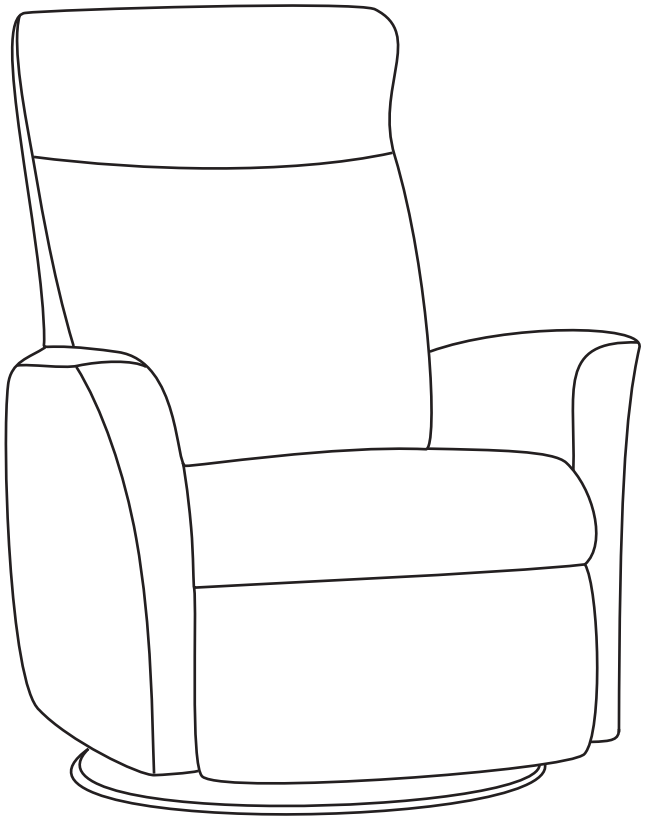

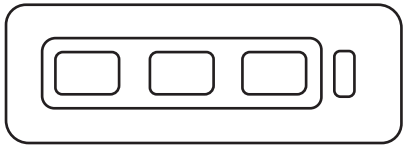

Power Extra

1

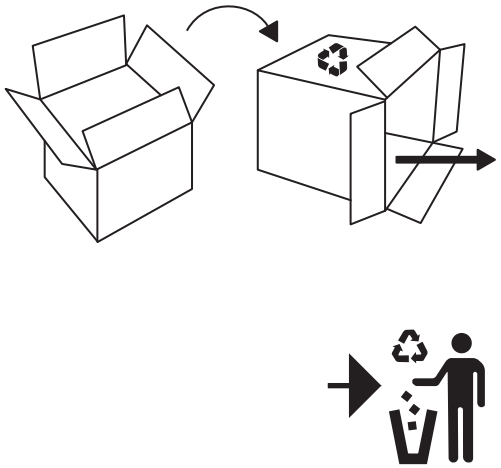

2

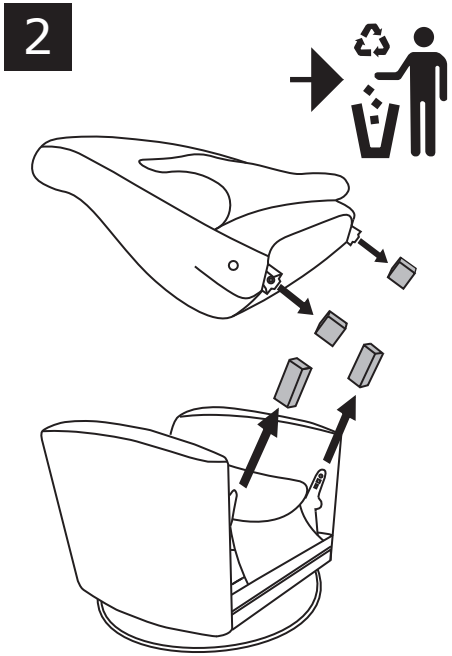

3

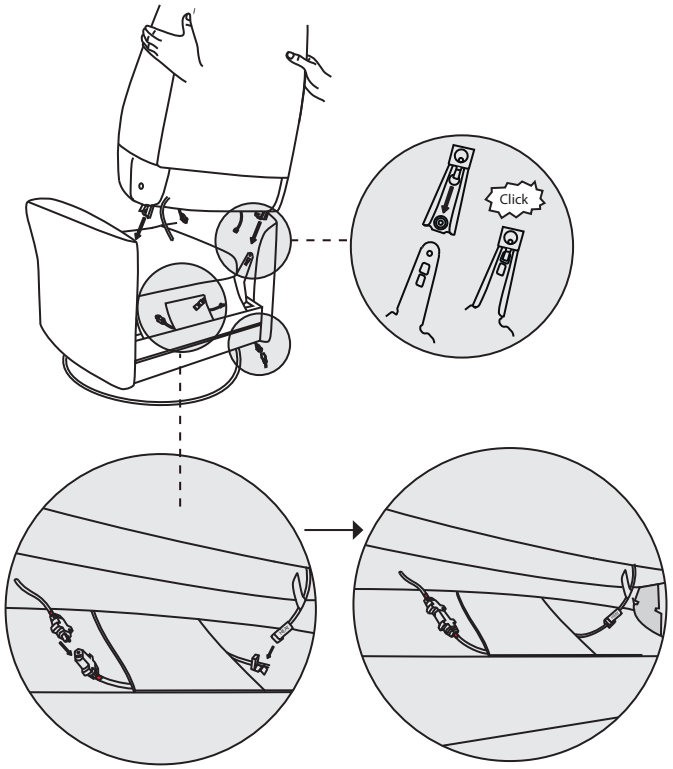

4

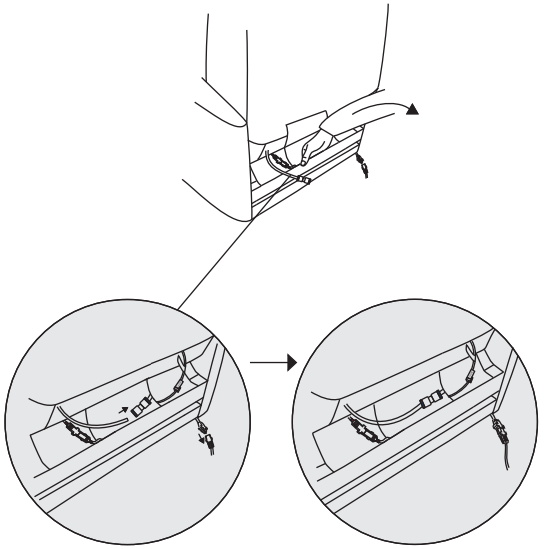

5

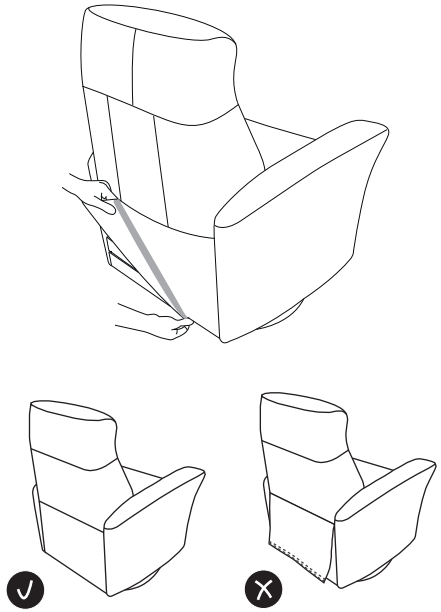

6

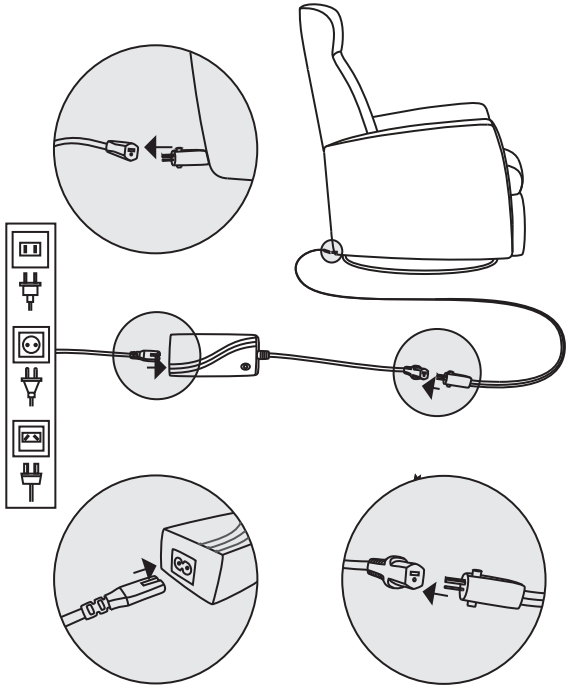

A139 Nordic Relax Power LUX (GL)_H2 Logo_12.05.25

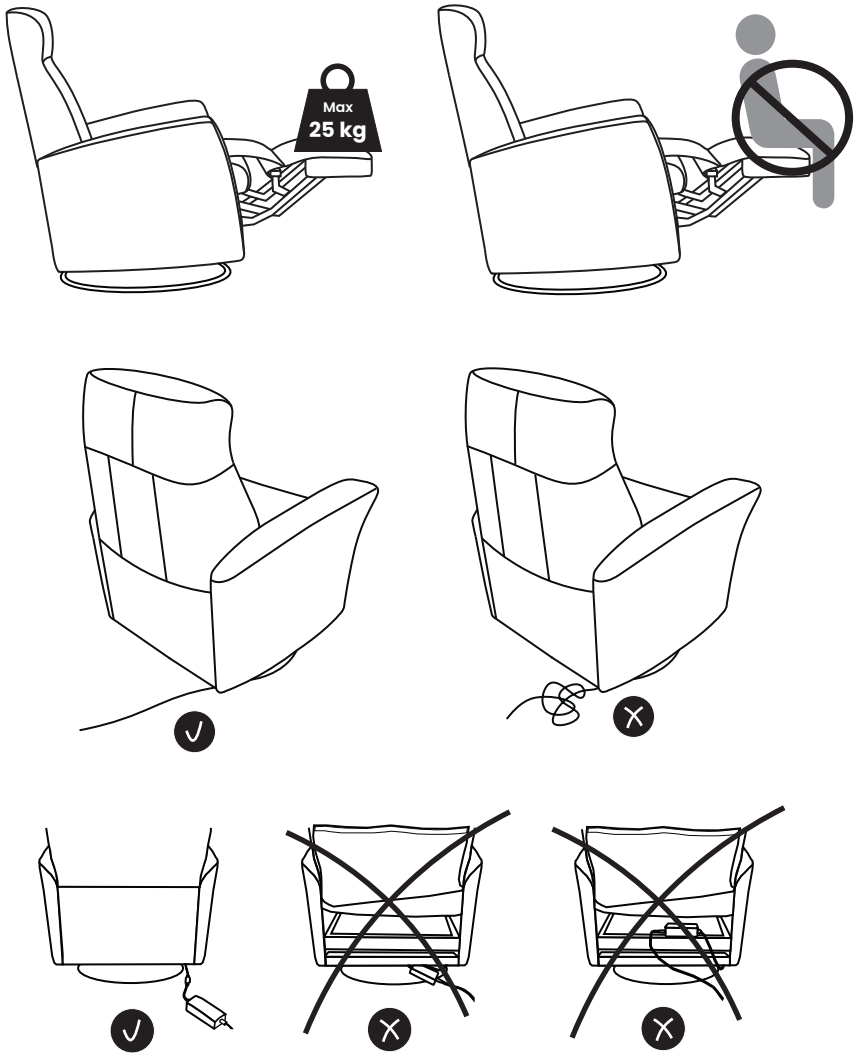

Please visit h2seating.com
or scan QR code for more information

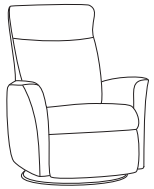

Nordic Relax
PowerLUX (GL)

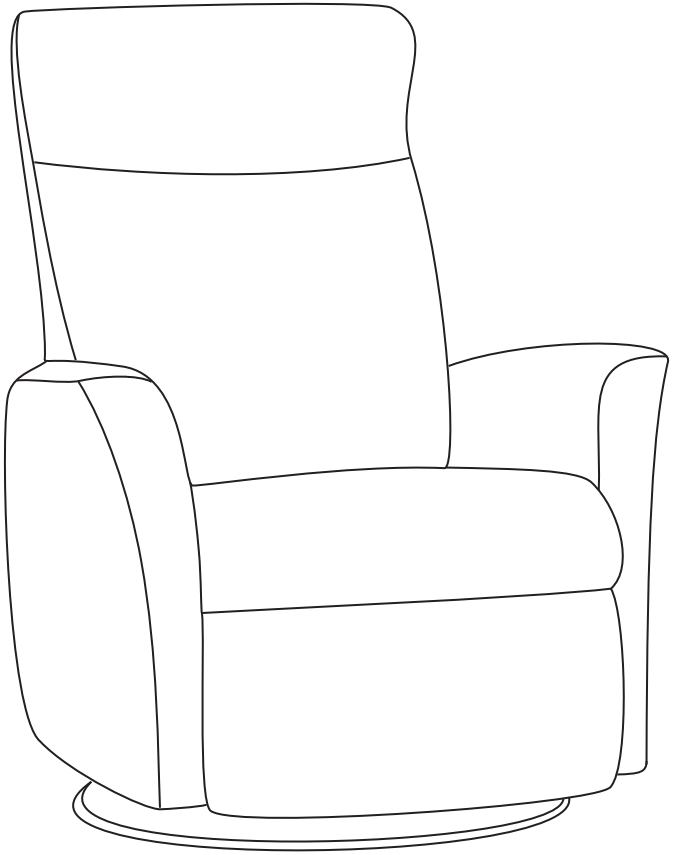

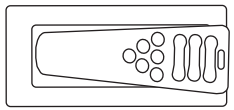

PowerLUX

1

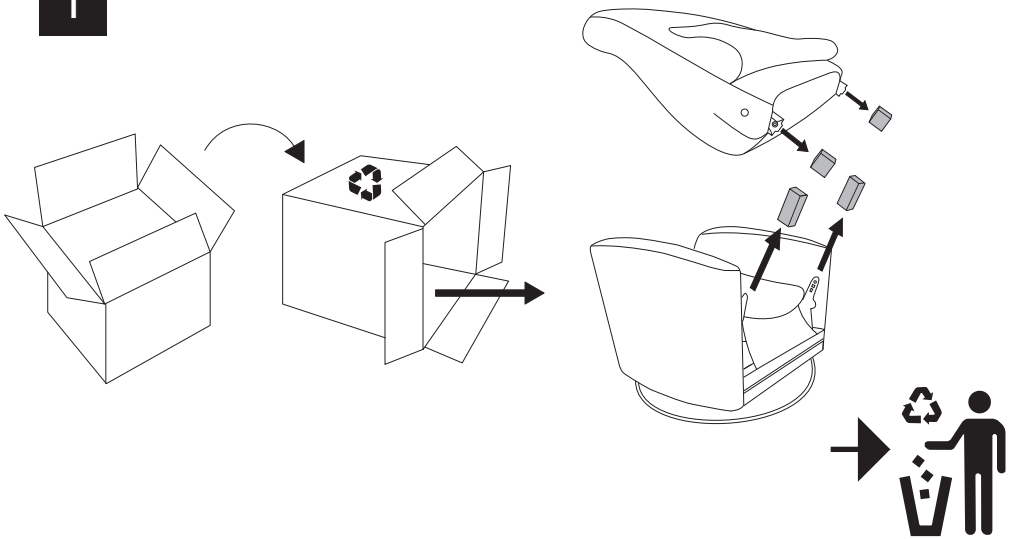

2

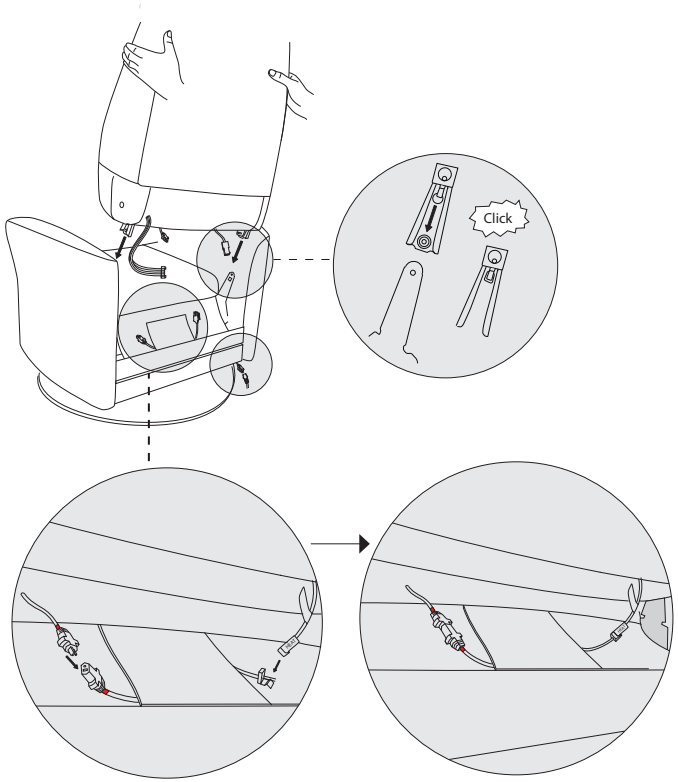

3

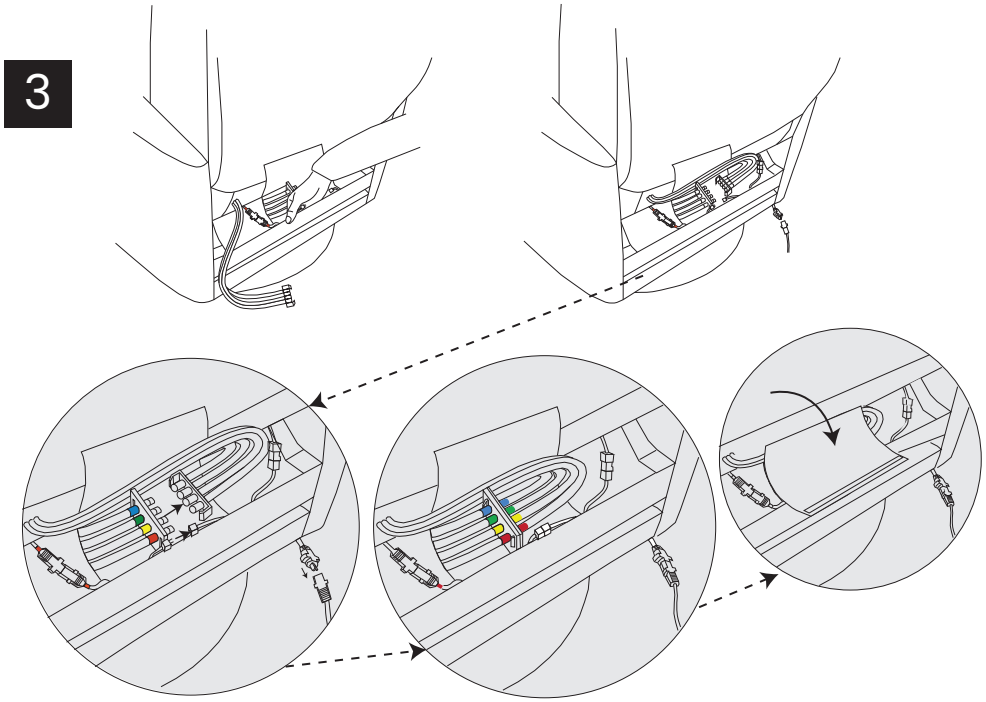

4

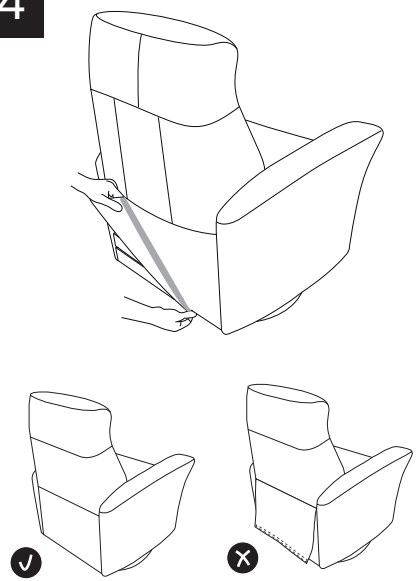

5

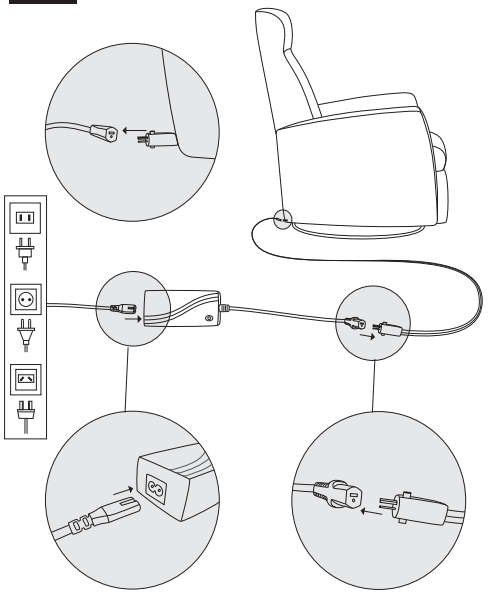

A363 Release Backrest Recliners w H2 Logo_12.02.25

6

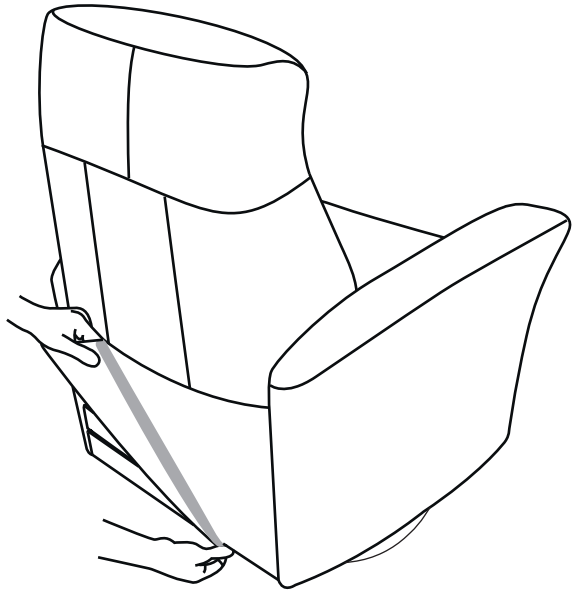

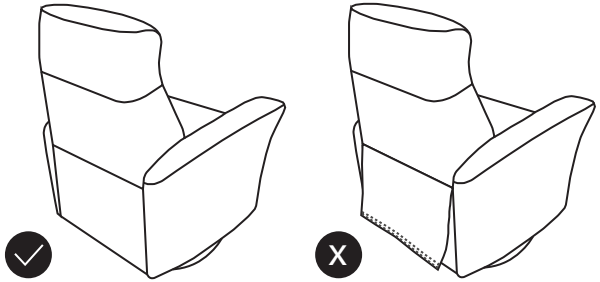

Please visit h2seating.com
or scan QR code for more information

Release Backrest Recliners

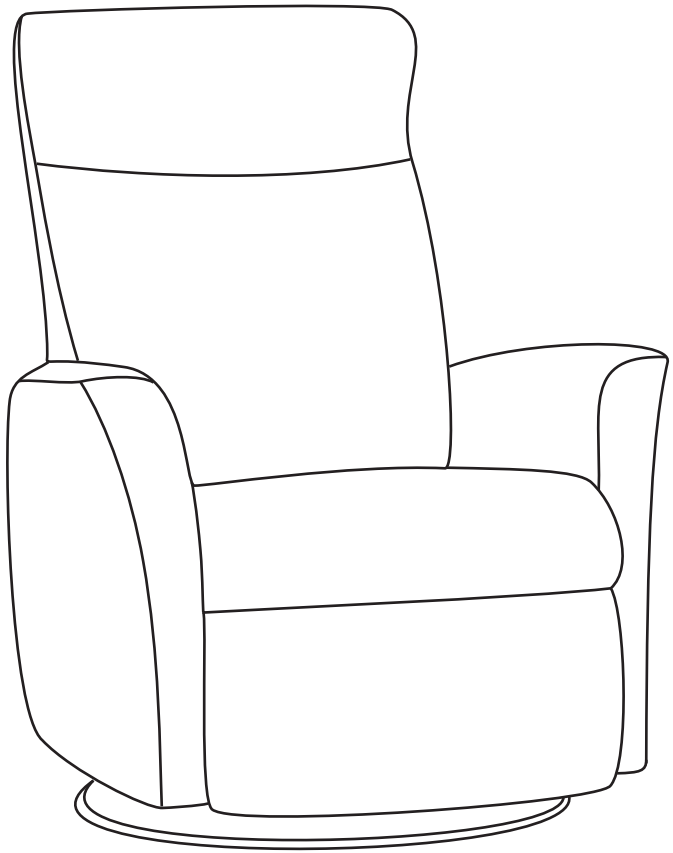

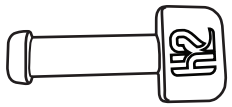

1

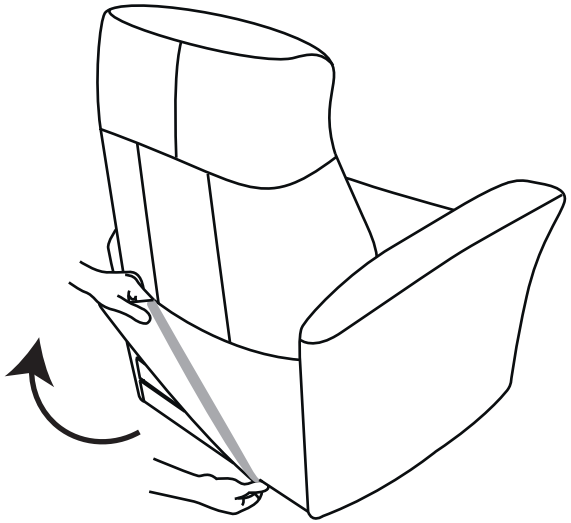

3

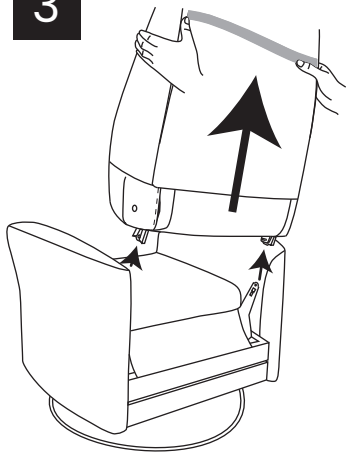

4

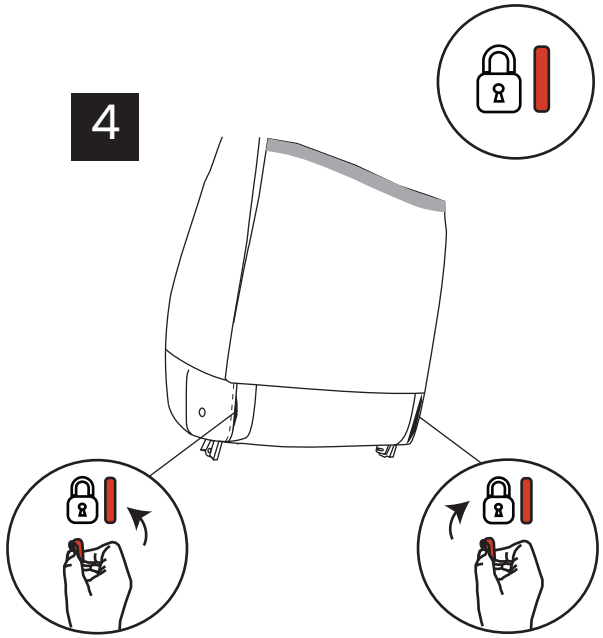

2

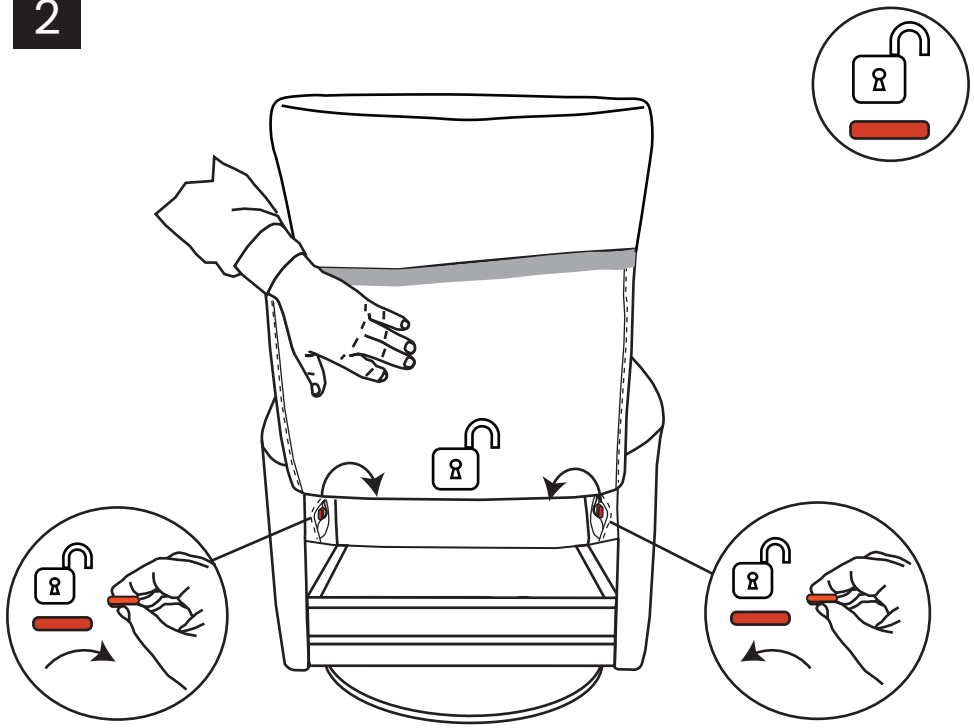
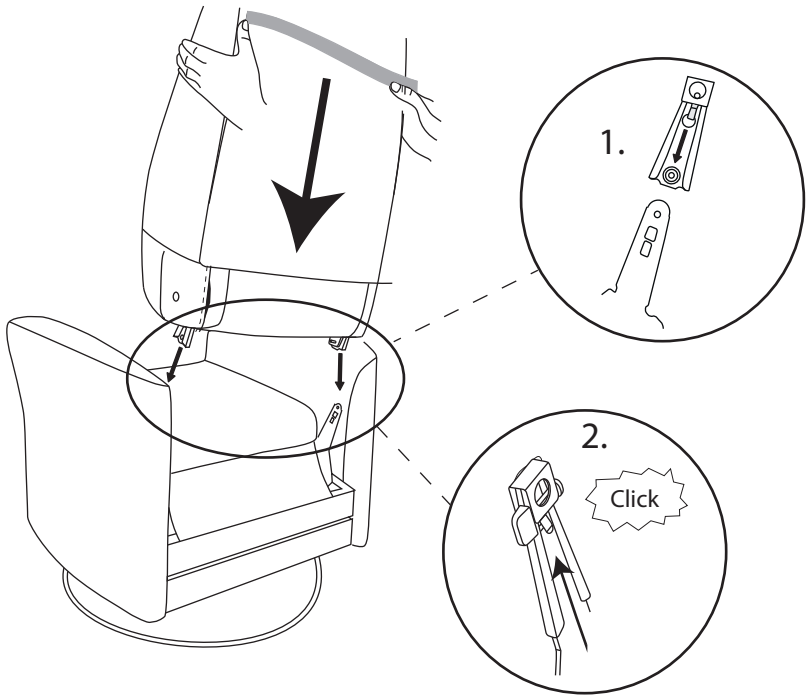
5