A326 Assembly FT w Steel base 11, 22 _New BOX_H2 Logo_21.10.24

Please visit h2seating.com
or scan QR code for more information

FURNSIT

Base 11 · 22

1

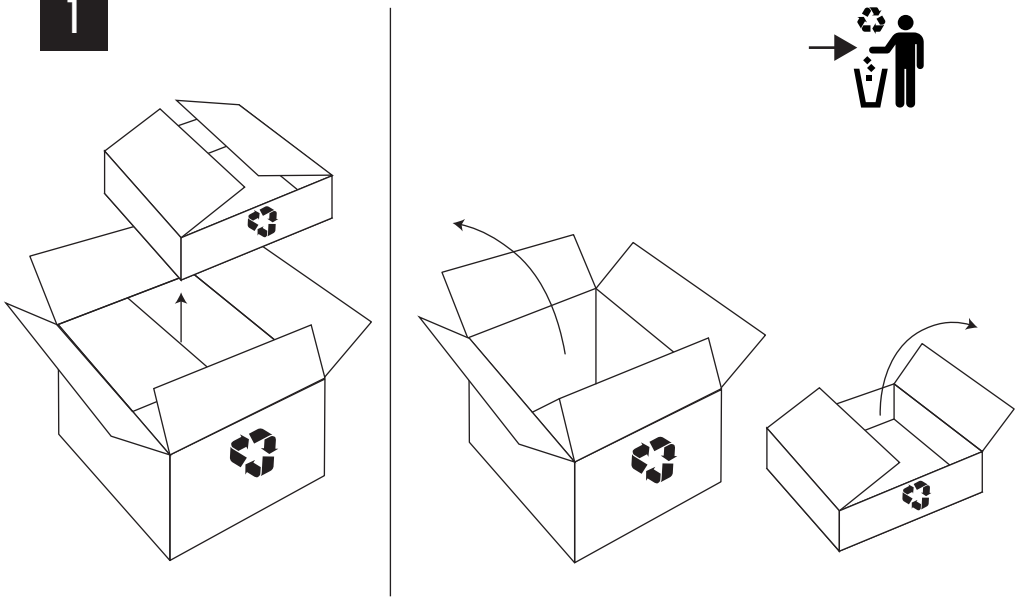

2

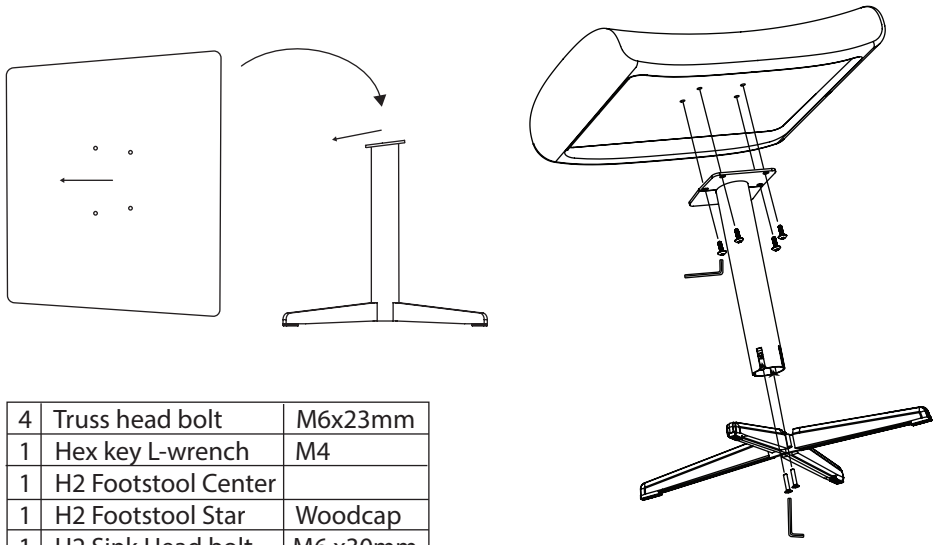

4	Truss head bolt	M6x23mm
1	Hex key L-wrench	M4
1	H2 Footstool Center	
1	H2 Footstool Star	Woodcap
1	H2 Sink Head bolt	M6 x30mm
1	Hex key L-wrench	M6

3

1	Swivel	Ø50
1	Cover Tube	Ø63,5
1	Steel Base	w/woodcap

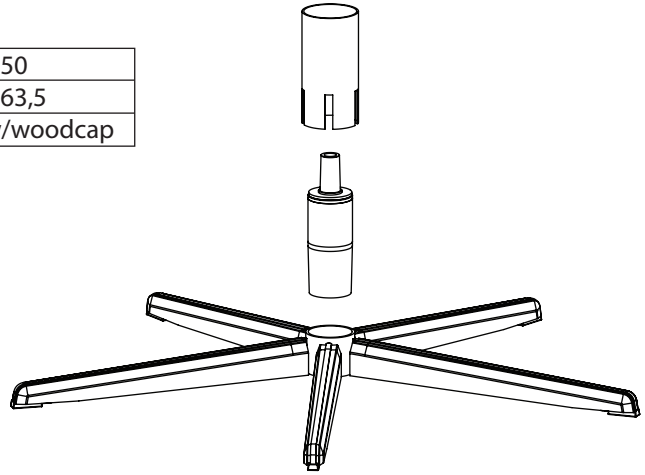

4

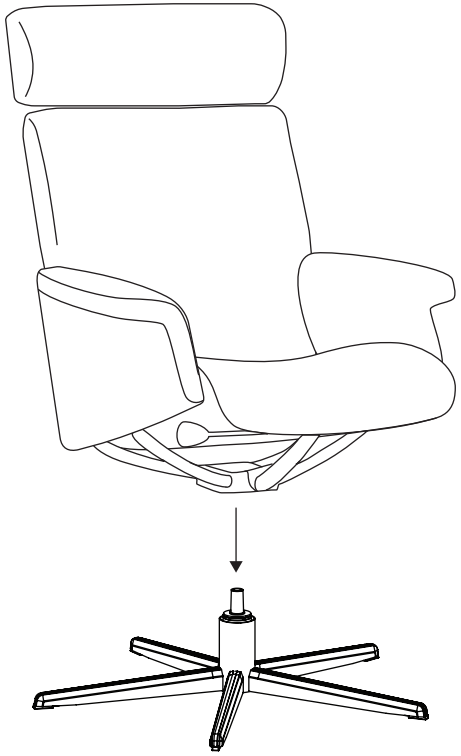

A327 Assembly FT _ Steel base 33, 44 w NEW BOX_H2 Logo _21.10.24

FURNSIT

Base 33 · 44

Please visit h2seating.com
or scan QR code for more information

1

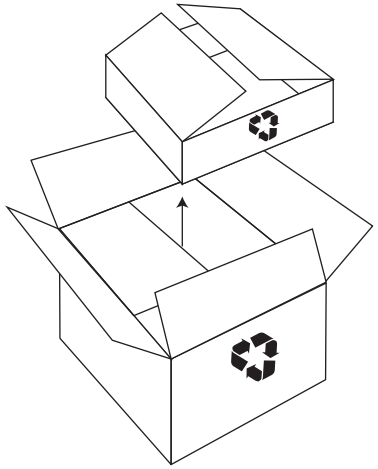

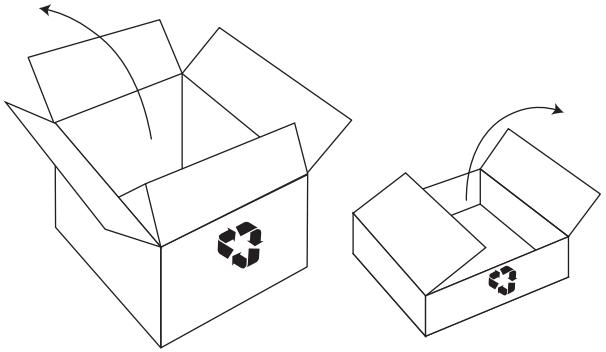

2

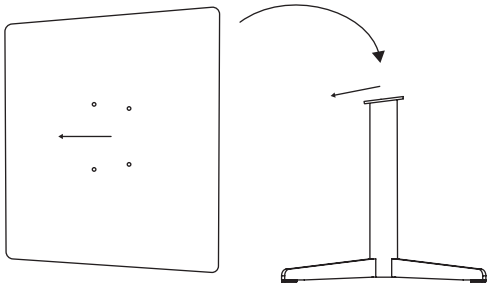

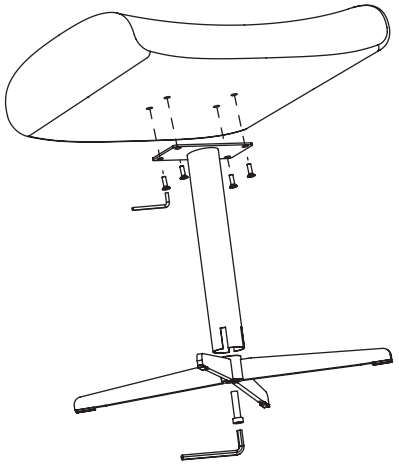

4	Truss head bolt	M6x23mm
1	Hex key L-wrench	M4
1	Footstool Center	D150x70x3
1	Steel Base FS	D515x8mm
1	Socket bolt	M12x50
1	Hex key L-wrench	No.10

3

1	Swivel	Ø40
1	Plastic Ring	Ø51,52
1	Cover Tube	Ø55
1	Steel Base	

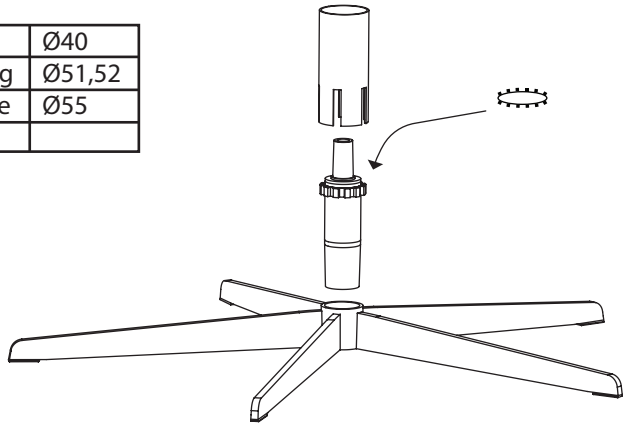

4

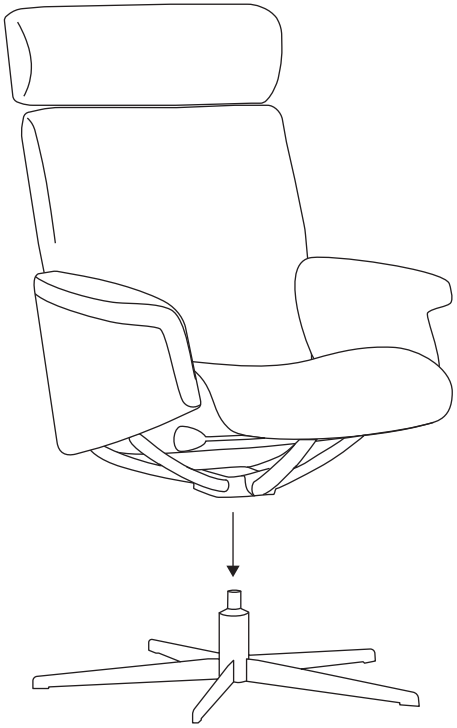

A329 Assembly FT_ Woodbase 55 w NEW BOX_ H2 Logo_ 21.10.24

Please visit h2seating.com
or scan QR code for more information

FURNSIT

WoodBase 55

1

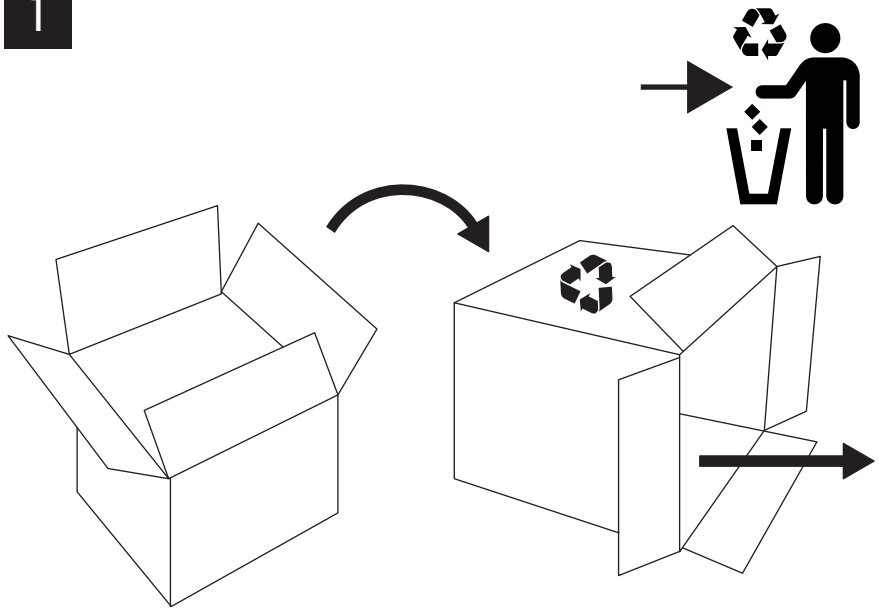

2

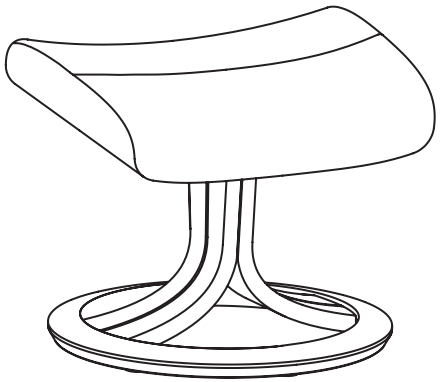

3

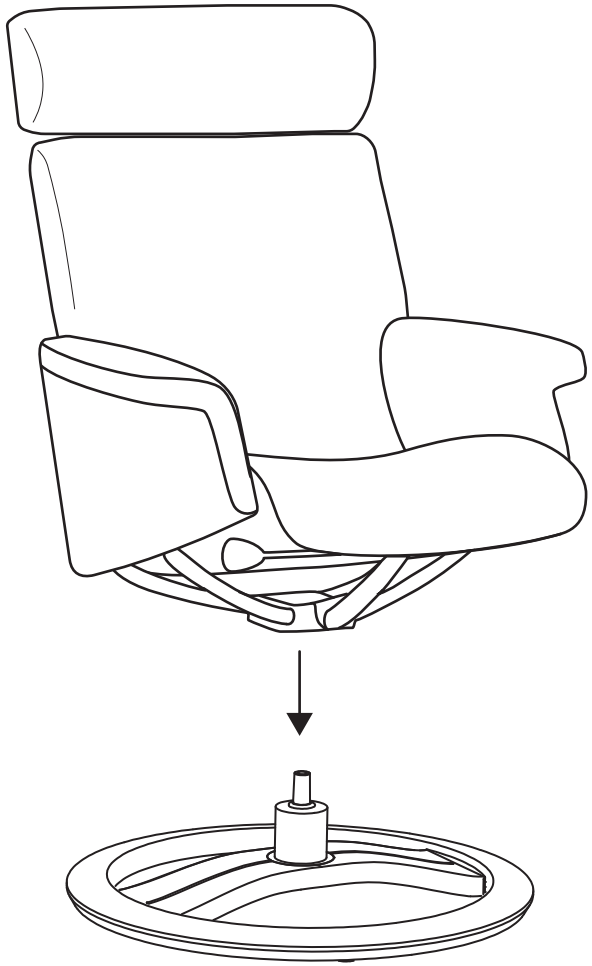

A239 Assembly FT_Alu Base 88.99_NEW BOX_H2 Logo_06.11.24

FURNSIT

Alu Base 88 · 99

Please visit h2seating.com
or scan QR code for more information

1

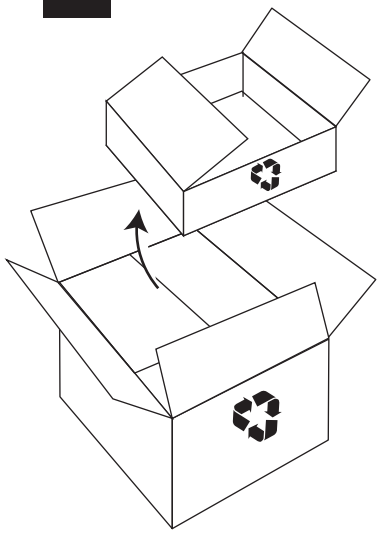

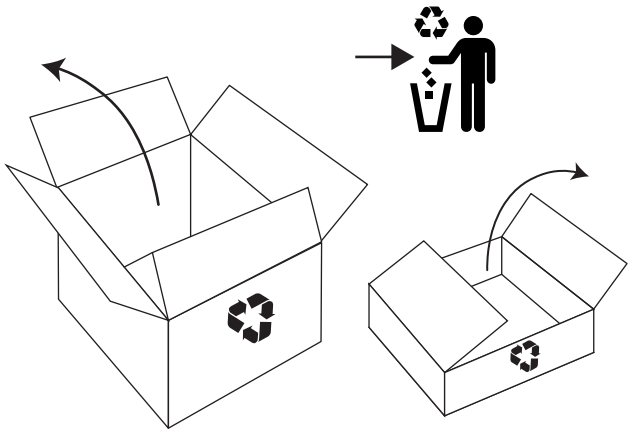

2

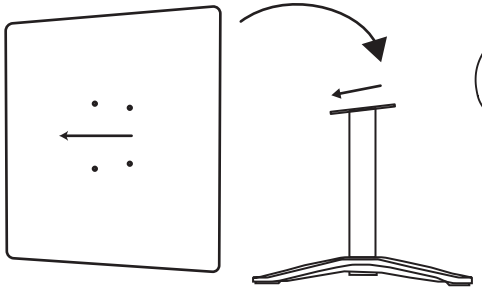

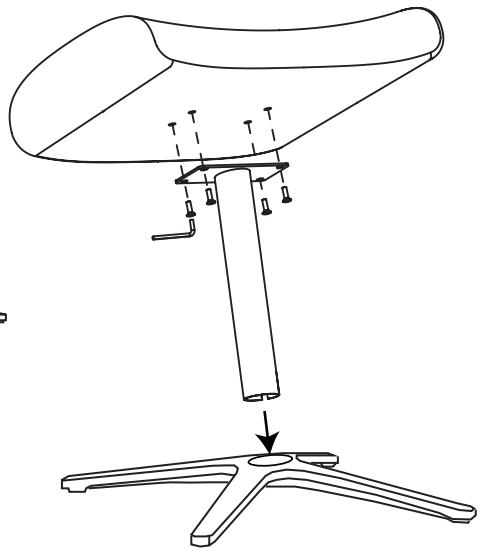

Footstool

4	Truss head bolt	M6x23mm
1	Hex key L-wrench	M4
1	Footstool Tube	117.5x116x4
1	Flat Footstool	D520

3
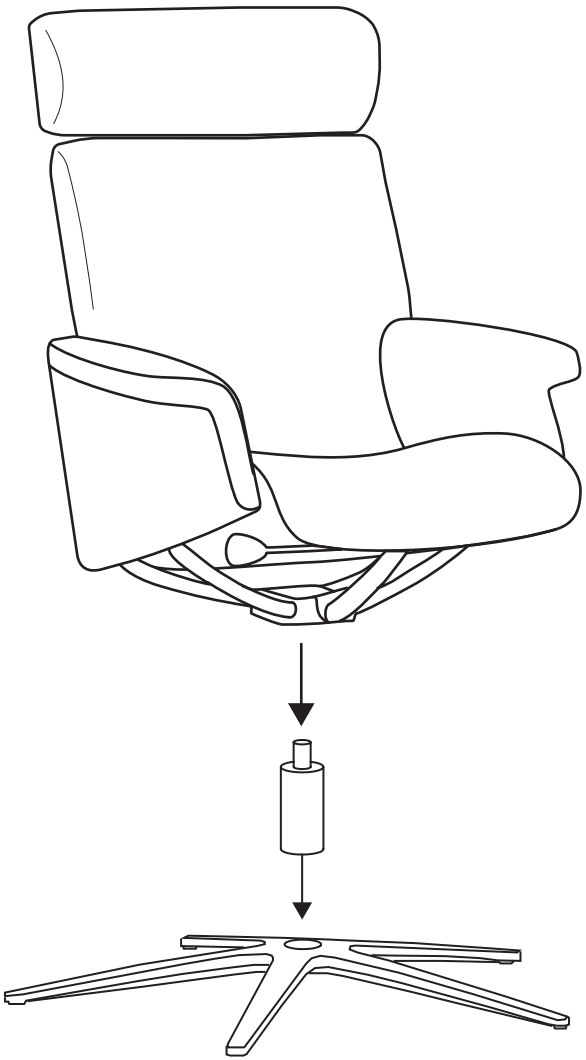
1	Swivel	Ø50
1	Base